Preface

Usage

The manual contains information on installing, using, operation and maintenance of the Tower UPS. Please carefully read this manual prior to installation.

Users

Technical Support Engineer

Maintenance Engineer

Note

Our company is providing a full range of technical support and services. Customer can contact our local office or customer service center for help.

The manual will update irregularly, due to the product upgrading or other reasons.

Unless otherwise agreed， the manual is only used as guide for users and any statements or information contained in this manual make no warranty expressed or implied.

Contents

1 Important Safety Precautions....1
1.1 General Information....1
1.2 UPS Safety....1
1.3 Battery Safety....2
1.4 Description of Symbols....2
2 Product Introduction....3
2.1 Introduction....3
2.2 System Configuration....3
2.3 Operation Mode....3
2.3.1 Normal Mode....3
2.3.2 Battery Mode....4
2.3.3 Bypass Mode....4
2.3.4 Maintenance Mode (Manual Bypass)....5
2.3.5 ECO Mode....5
2.3.6 Auto-restart Mode....6
2.3.7 Frequency Converter Mode....6
2.3.8 Self Aging Mode....6
2.4 UPS Structure....6
2.4.1 UPS Configuration....6
2.4.2 UPS Outlook....7
3 Installation Instruction....10
3.1 Location....10
3.1.1 Installation Environment....10
3.1.2 Site Selection....10
3.1.3 Size and Weight....10
3.1.4 Installation Tools....11
3.2 Unloading and Unpacking....11
3.2.1 Moving and Unpacking of the Cabinet....11
3.3 Positioning....12
3.3.1 Positioning Cabinet....12
3.4 Battery....12
3.5 Cable Entry....13
3.6 Power Cables....14
3.6.1 Specifications....14
3.6.2 Specifications for Power Cables Terminal....14
3.6.3 Circuit Breaker....15
3.6.4 Connecting Power Cables....15
3.7 Control and Communication Cables....17
3.7.1 Dry Contact Interface....17
3.7.2 Communication Interface....18
4 LCD Panel....19

4.1 Introduction....19
4.2 LCD panel for Cabinet....19
4.2.1 LED Indicator....19
4.2.2 Alarm....19
4.2.3 LCD Menu structure....20
4.2.4 Home page....20
4.2.5 System....21
4.2.6 Alarm....27
4.2.7 Control....28
4.2.8 Settings....29
4.3 Event List....36
5 Operations....40
5.1 UPS Start-up....40
5.1.1 Start from Normal Mode....40
5.1.2 Start from Battery....40
5.2 Procedure for Switching between Operation Modes....41
5.2.1 Switching the UPS into Battery Mode from Normal Mode....41
5.2.2 Switching the UPS into Bypass Mode from Normal Mode....41
5.2.3 Switching the UPS into Normal Mode from Bypass Mode....41
5.2.4 Switching the UPS into Maintenance Bypass Mode from Normal Mode....41
5.2.5 Switching the UPS into Normal Mode from Maintenance Bypass Mode....42
5.3 Battery Maintenance....42
5.4 EPO....43
5.5 Installation of Parallel Operation System....43
5.5.1 Parallel system diagram....43
5.5.2 Parallel system setting....44
6 Maintenance....46
6.1 Precautions....46
6.2 Instruction for Maintaining UPS....46
6.3 Instruction for Maintaining Battery string....46
7 Product Specification....48
7.1 Applicable Standards....48
7.2 Environmental Characteristics....48
7.3 Mechanical Characteristic....48
7.4 Electrical Characteristics....49
8 Software Download & Installation....51

1 Important Safety Precautions

1.1 General Information

- Please read the "safety precautions" carefully before installing and using this product to ensure correct and safe installation and use. Please keep this manual properly.
- UPS must be installed, tested and maintained by an engineer authorized by the manufacturer or its agent, otherwise it is possible to endanger personal safety and cause equipment failure. The damage to UPS caused thereon is excluded from the warranty.
- Under no circumstances shall equipment structure or components be dismantled or changed without the manufacturer's permission, otherwise the damage to UPS caused thereby shall not be covered by the warranty.
- Local regulations and laws shall be followed when using equipment. The safety precautions in the manual only supplement the local safety regulations.
- Due to product version upgrade or other reasons, the content of this document will be updated from time to time. Unless otherwise agreed, this document is used only as a guide, and all statements, information and recommendations in this document do not constitute any warranty, express or implied.

1.2 UPS Safety

- Before installing the equipment, wear insulating protective clothing, use insulating appliances, and remove conductive objects such as jewelry and watches to avoid electric shock or burns.
- The operating environment has a certain impact on the service life and reliability of UPS. The environmental requirements set in the manual must be followed when using and storing the equipment.
- Avoid using the equipment in direct sunlight, rain, or in environments with electrified dust.
- When placing UPS, maintain a safe distance around it to ensure ventilation. During operation of the system, do not block the vent.
- Do not allow liquids or other foreign objects to enter into the UPS cabinet or cabinet.
- Before using UPS, check whether the local distribution characteristics are consistent with the information of the product nameplate.
- As UPS is a large leakage current device, it is not recommended to install breakers with leakage protection function.
- Before connecting UPS, please further confirm whether the switch connecting the power supply of the UPS mains input/bypass power supply and the mains power are disconnected.
- When it is required to move or rewire UPS, make sure to disconnect AC input power supply, battery and other inputs, and UPS is fully powered down (more than 5min) before carrying out the corresponding operation, otherwise there may still be power in the port and inside of the equipment, and it is possible to cause a risk of electric shock.
- Before powering on, please confirm the correct grounding, and check wire connection and battery polarity to ensure correct connection. In order to ensure personal safety and the normal use of UPS, UPS shall be reliably grounded before use.
- UPS can be used for resistive and capacitive (such as computers), resistive and micro inductive load, not for pure capacitive and inductive load (such as motors, air conditioners and copiers) and half wave rectifier load.
- When cleaning the machine, please wipe it with a dry object. Under no circumstances shall water be used to clean electrical parts inside or outside the cabinet.
- After completion of maintenance operations, check immediately to ensure that no tools or other items are left in the cabinet.

- In case of fire, please use dry powder extinguisher correctly for extinguishment. There is a danger of electric shock if liquid fire extinguishers are used.
- Do not close the breaker before the UPS installation is completed. Do not power on UPS without the permission of a qualified electrician.

1.3 Battery Safety

- Battery installation and maintenance shall only be performed by personnel with battery expertise.
- There is danger of electric shock and short circuit current in the battery. In order to avoid safety accidents, when installing or replacing the battery, please pay attention to the following matters: do not wear jewelry and watches and other conductive objects; use special insulation tools; use facial protection; wear protective insulating clothing; do not turn the battery upside down or tilt it; disconnect the input breaker of the battery.
- The installation environment of the battery must be far away from the hot area, and it is not allowed to use or keep the battery near the fire source. The battery or battery strings cannot be processed by fire, otherwise it is possible cause personal injury due to explosion.
- Environmental factors impact battery life. Elevated ambient temperatures, poor quality utility power, and frequent short duration discharges will shorten battery life.
- The batteries should be regularly replaced to ensure the normal operation of UPS and sufficient backup time.
- Do not use a battery that is not approved by the supplier, as it may adversely affect the operation of the system. Use of a non supplier approved battery will void the manufacturer warranty.
- Check the screws of the connecting parts of the battery regularly to make sure they are tight and not loose. If the screws become loose parts, they must be tightened immediately.
- Please do not short the positive and negative terminals of the battery, Otherwise it is possible to cause electric shock or fire.
- Do not touch the wiring terminal of the battery. The battery circuit is not isolated from the input voltage circuit, and there will be a high voltage hazard between the battery terminal and the ground.
- Do not open or damage the battery, otherwise it is possible to cause short circuit and battery leakage and the electrolyte in the battery may cause damage to the skin and eyes. In case of exposure into the electrolyte, wash immediately with plenty of water and go to the hospital for examination.

1.4 Description of Symbols

The following symbols used herein have the following meaning.

Symbols	Description
DANGER	It is used to warn of emergency and dangerous situations which may lead to death or serious bodily injury if not avoided.
WARNING	It is used to warn of potential dangerous situations which will lead to a certain degree of personal injury if not avoided.
CAUTION	It is used to transmit the safety warning information of equipment or environmental, which may lead to equipment damage, data loss, equipment performance degradation or other unpredictable results if not avoided.
NOTICE	It is used for further detailed description of the things, highlighting important/critical information, etc.

2 Product Introduction

2.1 Introduction

The UPS supplies stable and uninterrupted power for the important load. It can eliminate the power supply surge, instantaneous high/low voltage, harmonic and frequency offset pollution, to provide high quality electrical energy to customers.

2.2 System Configuration

The Tower UPS is configured by the following part: Rectifier, Charger, Inverter, Static Switch and Manual Bypass Switch. One or several battery strings should be installed to provide backup energy once the utility fails. The UPS structure is shown in Fig. 2-1.

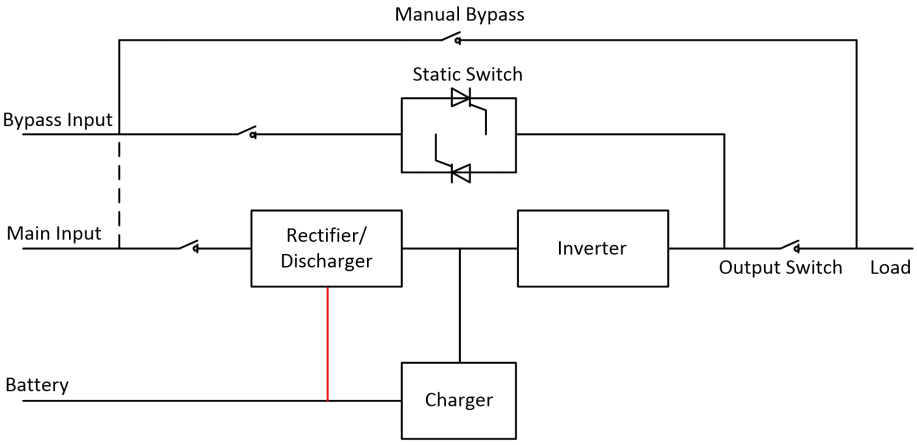

Fig. 2-1 UPS Configuration

2.3 Operation Mode

The UPS is an on-line, double-conversion UPS that permits operation in the following modes:

- Normal mode
- Battery mode
- Bypass mode
- Maintenance mode (manual bypass)
- ECO mode
- Auto-restart mode
- Frequency Converter mode
- Self Aging Mode

2.3.1 Normal Mode

When the UPS system is operating normally, the mains input is rectified to DC voltage via rectifier, and the DC voltage is converted to AC voltage by inverter. At the same time, the charger works for charging the battery.

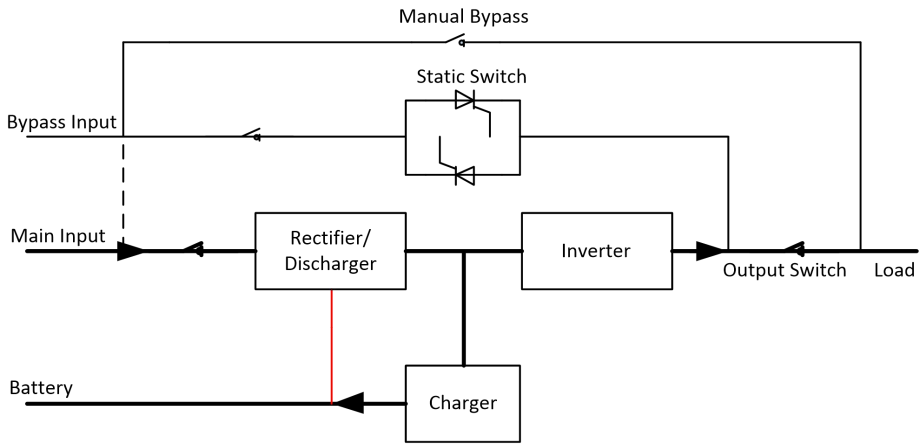

Fig 2-2 Normal mode operation diagram

2.3.2 Battery Mode

When the AC mains input power is abnormal, the inverter of UPS will switch to 'Battery mode', which obtain power from battery, and supply to AC load uninterruptedly. After restoration of the AC mains input power, the "Normal mode" operation will continue automatically without the necessity of user intervention.

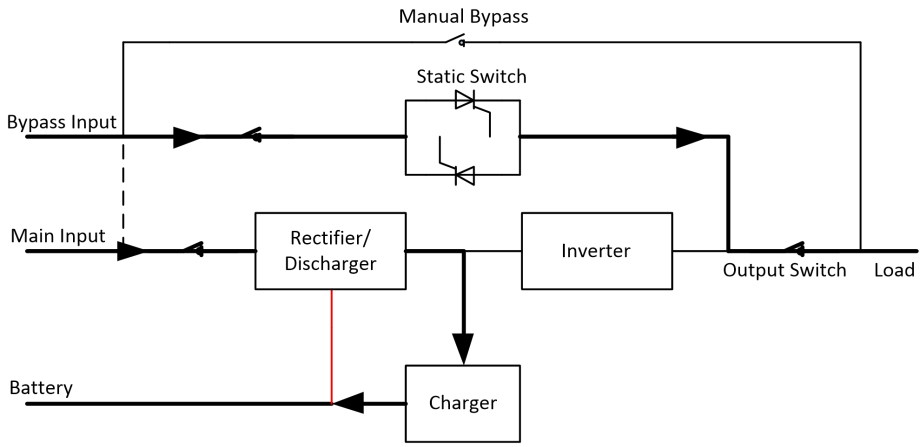

Fig 2-3 Battery mode operation diagram

Note

With the function of Battery cold start, the UPS can start without AC power. See more detail in section 5.1.2.

2.3.3 Bypass Mode

If the AC power is overload for inverter on normal mode, or if the inverter becomes abnormal, the UPS will switch the AC load from inverter to bypass. For the AC load, the switching process is uninterrupted, if the inverter is synchronized with bypass. However, if the inverter is unsynchronized with bypass, there will be a interruption, which is less than 3/4 cycle. This is to avoid large cross currents due to the paralleling of unsynchronized AC sources.

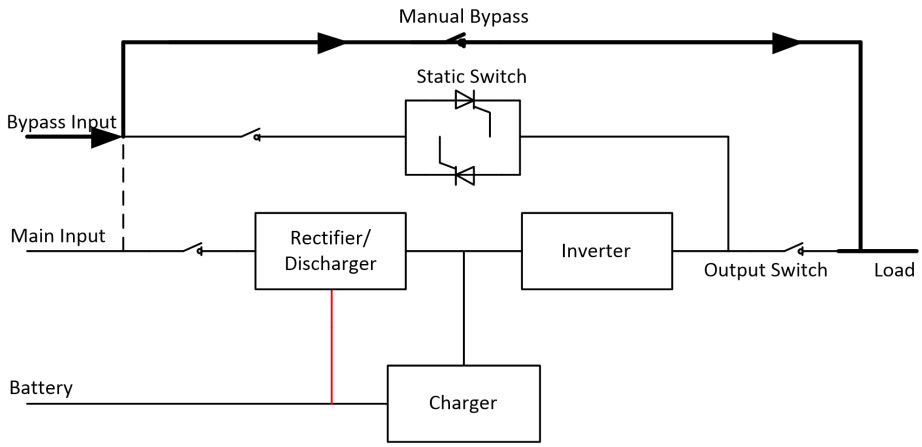

Fig. 2-4 Bypass mode operation diagram

2.3.4 Maintenance Mode (Manual Bypass)

A manual bypass switch is available to ensure continuity of supply to the critical load when the UPS becomes unavailable e.g. during a maintenance procedure. (See Fig.2-5).

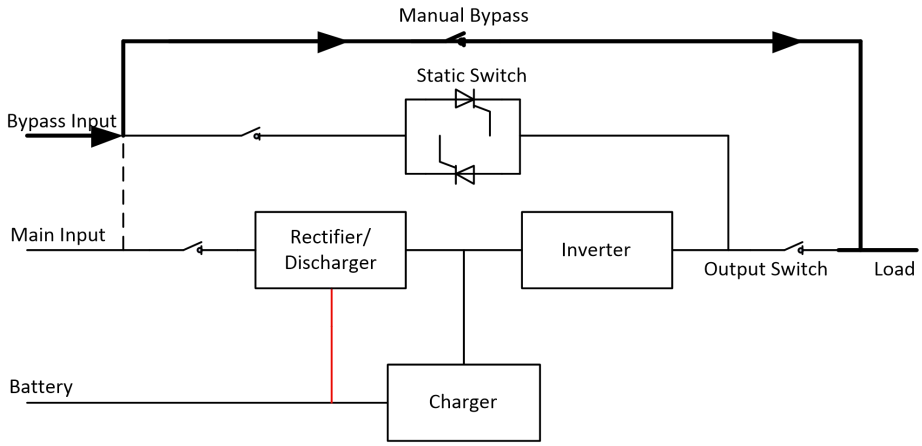

Fig .2-5 Maintenance mode operation diagram

	DANGER
	During Maintenance mode, dangerous voltages are present on the terminal of input, output and neutral, even with the LCD turned off.

2.3.5 ECO Mode

To improve system efficiency, UPS system can work in Bypass mode at normal time, and inverter is standby. When the bypass AC power is abnormal, The UPS transfers to ‘Battery mode’ or ‘Normal mode’ and the inverter powers the loads.

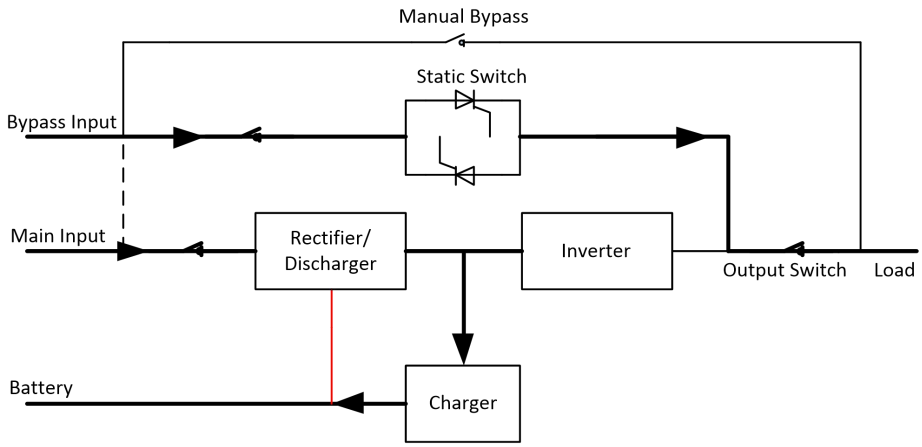

Fig.2-6 ECO Mode operation diagram

Note

There is a short interruption time (less than 4ms) when transfer from ECO mode to battery mode, it must be sure that the interruption has no effect on loads.

2.3.6 Auto-restart Mode

The battery may become exhausted following an extended AC mains failure. The inverter shuts down when the battery reaches the End of Discharge Voltage (EOD). The UPS may be programmed to "System Auto Start Mode after EOD". The system starts after a delay time when the AC mains input recovers. The mode is programmed by the commissioning engineer.

2.3.7 Frequency Converter Mode

By setting the UPS to Frequency Converter mode, the UPS could present a stable output of fixed frequency (50 or 60Hz), and the bypass static switch is not available.

2.3.8 Self Aging Mode

If users want to burn in UPS without load, could set the UPS as Self Aging Mode, in this mode, the current flow through rectifier, inverter, and back to input through bypass. It needs only 5% loss to burn in UPS with 100% load.

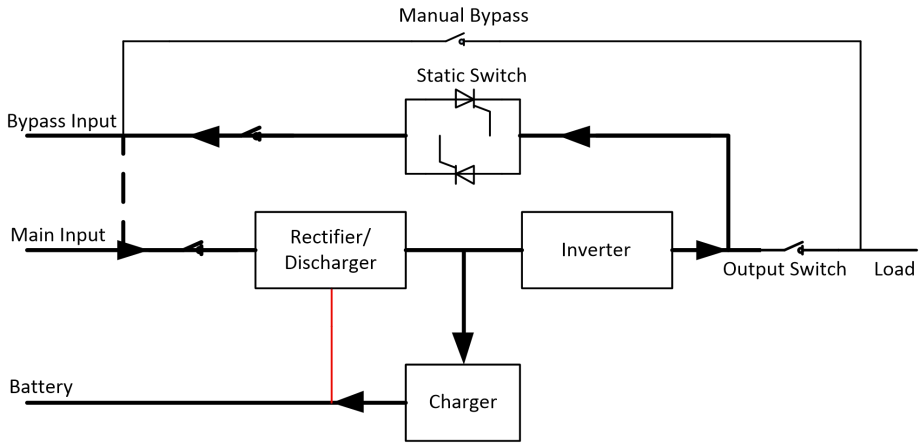

Fig.2-7 self aging operation diagram

2.4 UPS Structure

2.4.1 UPS Configuration

The UPS configuration is provided in Table 2.1.

Table2.1 UPS Configuration

Item	Components	Quantity	Remark
Standard Backup Type(S)	Circuit Breakers	5	Standard
	Dual Input	1	Standard
	Parallel Card,	1	Optional
	Dry Contact Card	1	Standard
Long Backup Type(H)	Circuit Breakers	4	Standard
	Dual Input	1	Standard
	Parallel Card,	1	Optional
	Dry Contact Card	1	Standard

2.4.2 UPS Outlook

The UPS outlook is shown as Fig.2-8 to Fig. 2-9.

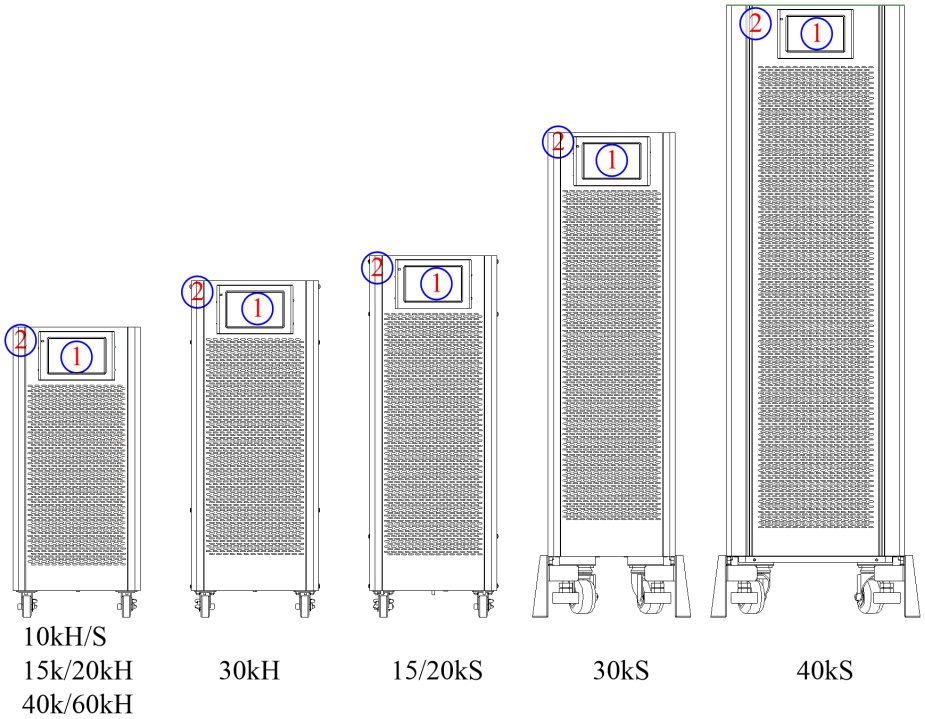

Fig. 2-8 Front appearance of 10-60 kVA model

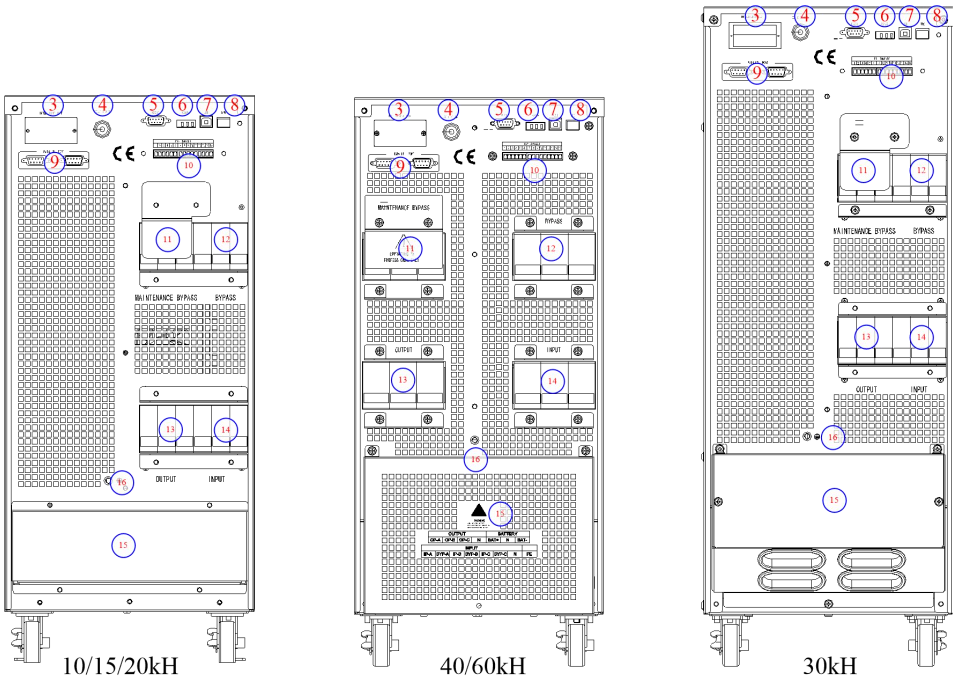

(a) 10-60 kVA Long backup model

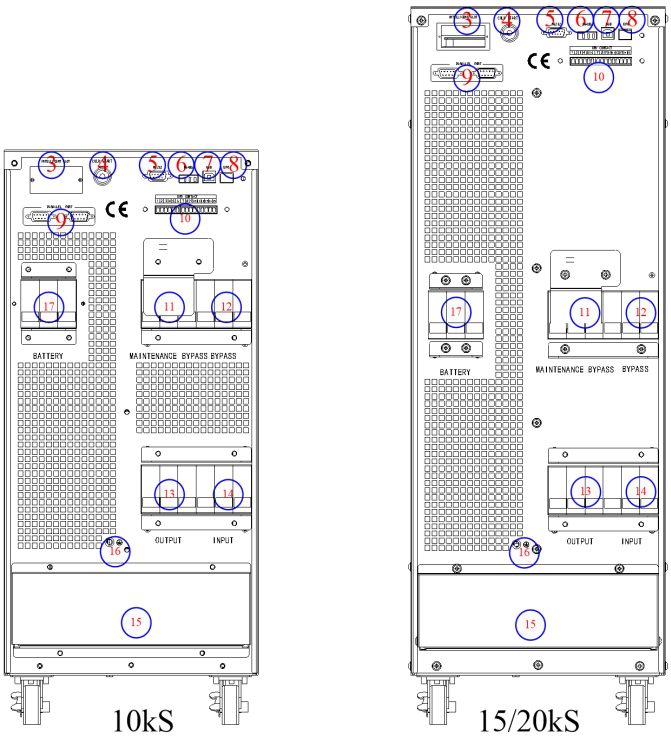

(b) 10-20 kVA standard backup model

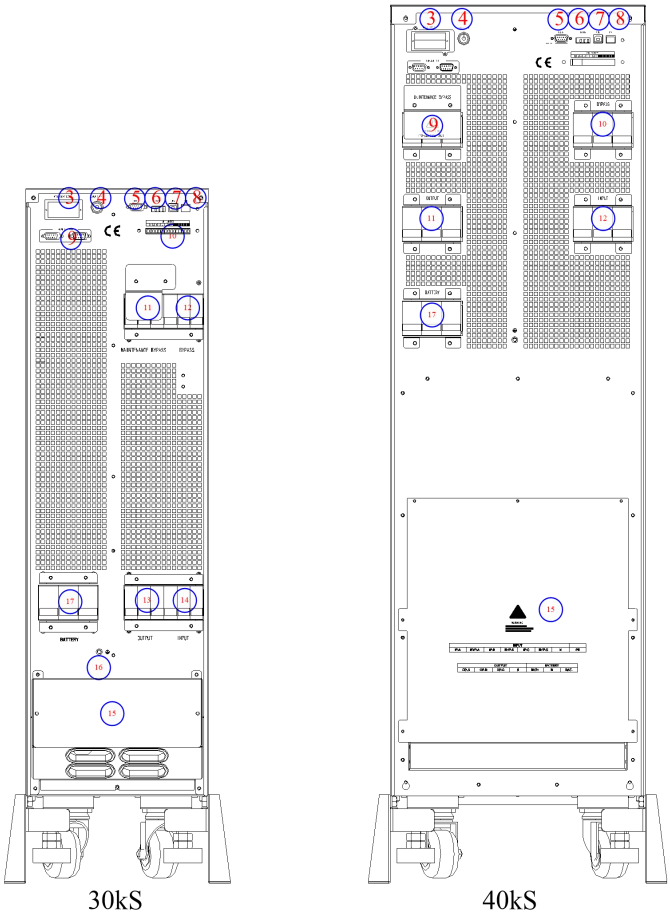

(c) 30-40kVA standard backup model

Fig. 2-9 Rear panel appearance of 10-60 kVA model

Table2.2 UPS Configuration

Item	Description
1	The touch screen LCD
2	LED
3	Intelligent slot :SNMP
4	Cold start button, used to light up the LCD in battery mode
5	RS232 ,used to connect monitoring software
6	RS485, used to connect monitoring software
7	USB: B type, used to connect monitoring software
8	EPO
9	Parallel port: option
10	Dry contact: option
11	Maintenance bypass : surge protection
12	Bypass breaker: surge protection
13	Output breaker: surge protection
14	Input breaker: surge protection
15	Connection terminals and protective cover
16	GND
17	Battery breaker: surge protection

3 Installation Instruction

3.1 Location

As each site has its requirements, the installation instructions in this section are to act as a guide for the general procedures and practices that should be observed by the installing engineer.

3.1.1 Installation Environment

The UPS is intended for indoor installation and uses forced convection cooling by internal fans. Please make sure there is enough space for the UPS ventilation and cooling.

Keep the UPS far away from water, heat and inflammable and explosive, corrosive material. Avoid installing the UPS in the environment with direct sunlight, dust, volatile gases, corrosive material and high salinity.

Avoid installing the UPS in the environment with conductive dirt.

The operating environment temperature for battery is 20˚C-25˚C. Operating above 25˚C will reduce the battery life, and operation below 20˚C will reduce the battery capacity.

The battery will generate a little amount of hydrogen and oxygen at the end of charging; ensure the fresh air volume of the battery installation environment must meet EN50272-2001 requirements.

If external batteries are to be used, the battery circuit breakers (or fuses) must be mounted as close as possible to the batteries, and the connecting cables should be as short as possible.

3.1.2 Site Selection

Ensure the ground or installation platform can bear the weight of the UPS cabinet ,batteries and battery rack.

No vibration and less than 5 degree inclination horizontally.

The equipment should be stored in a room so as to protect it against excessive humidity and heat sources.

The battery needs to be stored in dry and cool place with good ventilation. The most suitable storage temperature is 20 ºC to 25ºC.

3.1.3 Size and Weight

The size of three dimensions and weight for the UPS cabinet is shown in Table 3.1.

	CAUTION
⚠	Ensure there is at least 0.8m before the front of the cabinet so as to easily maintain the power module and at least 0.5m behind for ventilation and cooling.

Table 3.1Size and Weight for the cabinet

Configuration	Size(W*D*H)	Weight
10kVA Standard Backup Type	250*720*560mm	82kg(20pcs 9AH)
10kVA Long Backup Type	250*720*560mm	31kg
15kVA Standard Backup Type	250*800*700mm	131kg(40PCS 7AH)
15kVA Long Backup Type	250*720*560mm	33kg
20kVA Standard Backup Type	250*500*700mm	145kg(40PCS 9AH)
20kVA Long Backup Type	250*720*560mm	33kg
30kVA Standard Backup Type	250*840*930mm	215kg(60PCS 9AH)
30kVA Long Backup Type	250*840*650mm	42kg
40kVA Standard Backup Type	350*785*1185mm	300kg(80PCS 9AH)
40kVA Long Backup Type	250*720*560mm	42kg
60kVA Long Backup Type	250*790*560mm	48kg

3.1.4 Installation Tools

Installation tools which may be used in installation process are shown in Table 3-2 and used as needed.

	DANGER
	To ensure safety, installation tools for live operation shall be insulated.

Table 3-2 Installation tools

Tool name	Main function	Tool name	Main function
Forklift	Handling	Nail hammer	Knock, install and remove components
Herringbone ladder	High-place operation	Rubber hammer	Knock and install components
Clip-on ammeter	Detect current	Percussion drill, drill bit	Drill
Multimeter	Check electrical connection and electrical parameters	Insulating tape	Electrical insulation
Cross screwdriver	Fasten screw	Heat-shrinkable tubing	Electrical insulation
Leveling instrument	Leveling	Heat gun	Heat heat-shrinkable tubing
Insulated monkey wrench	Tighten and loosen bolts	Electrician's knife	Wire stripping
Insulated torque wrench	Tighten and loosen bolts	Cable tie	Bundle
Crimping pliers	Cc cold-pressed terminal	Leather working gloves	Protect operator’s hands
Hydraulic clamp	Clamp OT terminal	Antistatic gloves	Anti-static
Diagonal pliers	Shear cables	Insulating gloves	Insulation
Wire stripper	Wire stripping	Insulated protective shoes	Protect operator

3.2 Unloading and Unpacking

3.2.1 Moving and Unpacking of the Cabinet

1>The steps to move and unpack the cabinet are as follows：

2>Check if any damages to the packing. (If any, contact to the carrier)

3>Transport the equipment to the designated site by forklift.

4>Unpack the package.

5>Remove the protective foam around the cabinet.

6>Check the UPS.

(a) Visually examine if there are any damages to UPS during transportation. If any, contact to the carrier.

(b) Check the UPS with the list of the goods. If any items are not included in the list, contact to our company or the local office.

7>Dismantle the bolt that connects the cabinet and wooden pallet after disassembly.

8>Move the cabinet to the installation position.

	CAUTION
	1>Be careful while removing to avoid scratching the equipment. 2>The waste materials of unpacking should be disposed to meet the demand for environmental protection.

3.3 Positioning

3.3.1 Positioning Cabinet

The UPS cabinet has two way of supporting itself: One is to support itself temporarily by the four wheels at the bottom， making it convenient to adjust the position of the cabinet. The other is to support the cabinet permanently by anchor blots after adjusting the position of the cabinet. The supporting structure is shown in Fig. 3-1.

Fig.3-1 Supporting structure（Bottom view）

The steps to position the cabinet are as follows：

1>Ensure the supporting structure is in good condition and the mounting floor is smooth and strong.

2>Retract the anchor bolts by turning them counterclockwise using wrench, the cabinet is then supported by the four wheels.

3>Adjust the cabinet to the right position by the supporting wheels.

4>Put down the anchor bolts by turning them clockwise using wrench, the cabinet is then supported by the four anchor bolts.

5>Ensure the four anchor bolts are in the same height and the cabinet is fixed and immovable.

6>Positioning done.

	CAUTION
⚠	Auxiliary equipment is needed when the mounting floor is not solid enough to support the cabinet, which helps distribute the weight over a larger area. For instance, cover the floor with iron plate or increase the supporting area of the anchor bolts.

3.4 Battery

Three terminals（positive，neutral，negative ）are drawn from the battery unit and connected to UPS system. The neutral line is drawn from the middle of the batteries in series (See Fig.3-2).

Select total number of batteries from 30 to 44 (even number), and the number of positive and negative battery strings must be consistent. 10kVA could select the total number 20pcs.

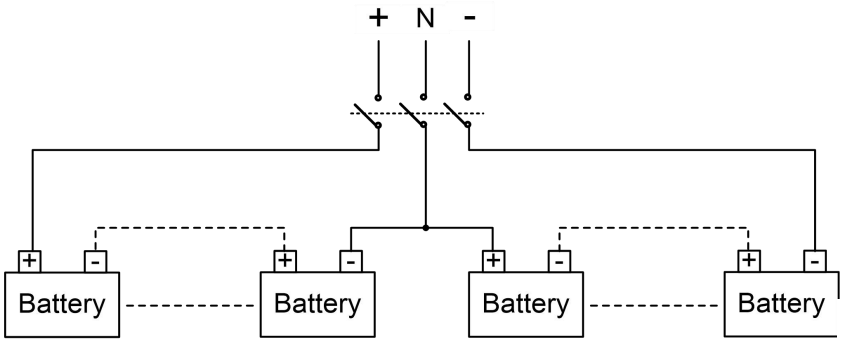

Fig 3-2 Battery string wiring diagram

	DANGER
	1>The battery terminal voltage is of more than 200Vdc, please follow the safety instructions to avoid electric shock hazard. 2>Positive and negative battery strings must be equipped with a 3-channel battery breaker with limited current protection. 3>Ensure the positive, negative, neutral electrode is correctly connected from the battery unit terminals to the breaker and from the breaker to the UPS system.

3.5 Cable Entry

Cables can enter the UPS cabinet from the bottom. Cable entry is made possible through a blanking plate fitted at the bottom of the equipment. The cable entry is shown in Fig.3-3.

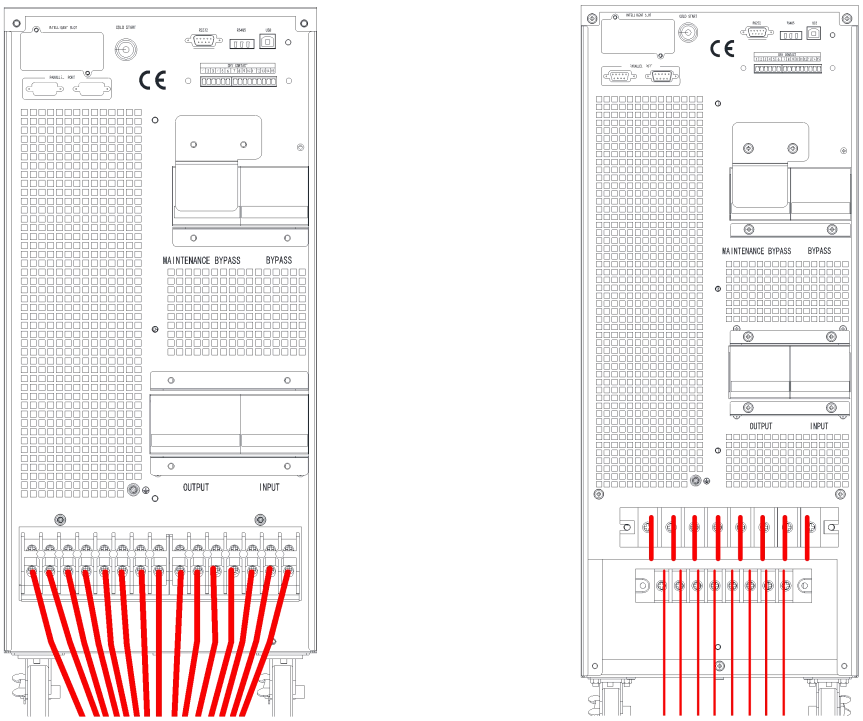

Fig.3-3 Cable entry

3.6 Power Cables

3.6.1 Specifications

The UPS power cables are recommended in Table 3.3.

Table 3.3 Recommended cables for power cables

Contents			10kVA	15kVA	20kVA	30kVA	40kVA	60kVA
Main Input	Main Input Current(A)		19	28	38	56	76	112
	Cable Section (mm²)	A	6	6	10	16	25	35
		B	6	6	10	16	25	35
		C	6	6	10	16	25	35
		N	6	6	10	16	25	35
Main Output	Main Output Current(A)		15	23	30	45	60	90
	Cable Section (mm²)	A	6	6	10	10	25	35
		B	6	6	10	10	25	35
		C	6	6	10	10	25	35
		N	6	6	10	10	25	35
Bypass Input (Optional)	Bypass Input Current(A)		15	23	30	45	60	90
	Cable Section (mm²)	A	6	6	10	10	25	35
		B	6	6	10	10	25	35
		C	6	6	10	10	25	35
		N	6	6	10	10	25	35
Battery Input	Battery Input current(A)		25	35	50	75	100	150
	Cable Section (mm²)	+	10	10	16	25	25	35
		-	10	10	16	25	25	35
		N	10	10	16	25	25	35
PE	Cable Section (mm²)	PE	6	6	10	10	25	35

Note

The recommended cable section for power cables are only for situations described below：

- Ambient temperature：30℃.
- The length of the AC power cables are no longer than 50 m and the length of the DC power cables are no longer than 30 m. Also, the AC loss of the cable should be less than 3%，and DC loss should be less than 1%.
- Currents listed in the table are based on the 380V system (Line-to-line voltage). For 400V system, the currents need to be multiplied by 0.95; For 415V system, the currents need to be multiplied by 0.9.
- The value in parentheses indicates the recommended cable for the UPS output and bypass N-line when the UPS works in triple-single mode.
- When the AC load is nonlinear, the output neutral cable specification should be 1.7 times to the recommended value.

3.6.2 Specifications for Power Cables Terminal

Specifications for power cables connector are listed as Table 3.4.

Table 3.4 Requirements for power module terminal

Port	Connection	Bolt		Bolt Aperture	
		10-30kVA	40-60kVA	10-30kVA	40-60kVA
Main Input	Cables crimped OT terminal	M5	M6	5.8mm	7mm
		M6	M6	7mm	7mm
Bypass Input	Cables crimped OT terminal	M5	M6	5.8mm	7mm
		M6	M6	7mm	7mm
Battery	Cables crimped OT terminal	M5	M8	5.8mm	9mm
		M6	M8	7mm	9mm
Main Output	Cables crimped OT terminal	M5	M8	5.8mm	9mm
		M6	M8	7mm	9mm
PE	Cables crimped OT terminal	M5	M6	5.8mm	7mm
		M6	M6	7mm	7mm

3.6.3 Circuit Breaker

The circuit breakers (CB) for the long time model are recommended in Table 3.5.

Table 3.5 Recommended CB

Installed position	10kVA	15kVA	20kVA	30kVA	40kVA	60kVA
Battery CB	32A/250Vdc	63A/250Vdc	63A/250Vdc	100A/250Vdc	125A/250Vdc	160A/250Vdc

	CAUTION
⚠	The recommended CB is according to ±20PCS battery. If you use a different battery configuration, please re-select the battery CB specification The CB with RCD (Residual Current Device) is not suggested for the system.

3.6.4 Connecting Power Cables

The steps of connecting power cables are as follows:

1>Verify that all the switches of the UPS are completely open and the UPS internal maintenance bypass switch is open. Attach necessary warning signs to these switches to prevent unauthorized operation.

2>Remove the terminal cover. The input and output terminal, battery terminal and protective earth terminal are shown in Fig.3-4 &Fig. 3-5.

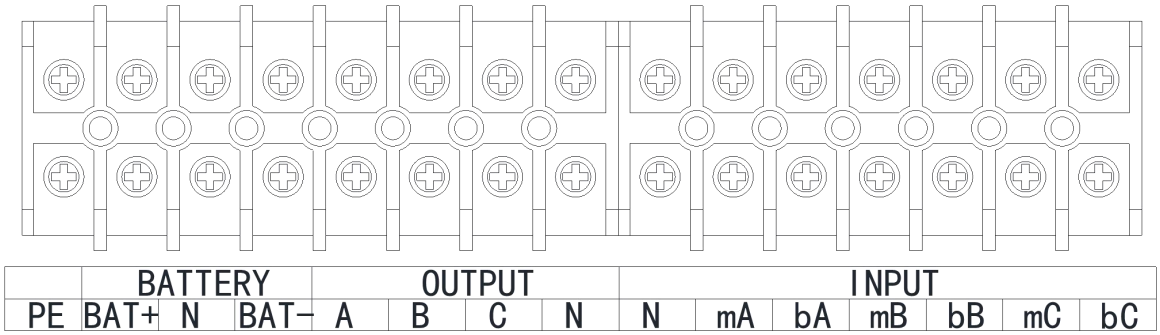

(a) 10-20kVA model

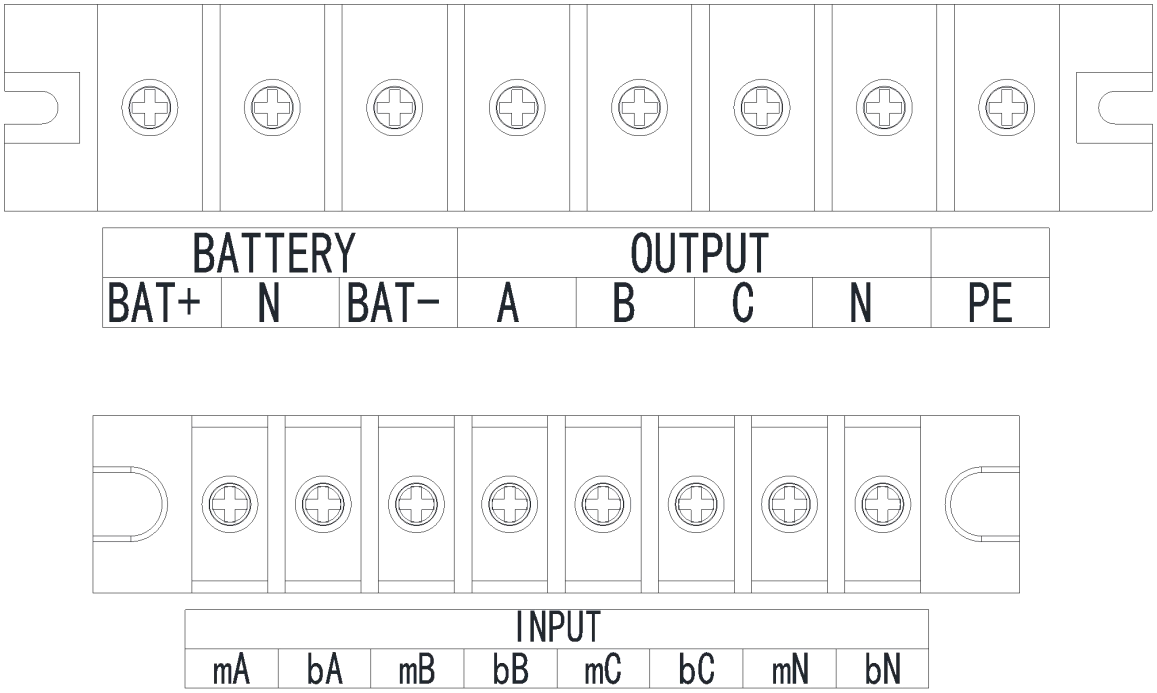

(b) 30kVA model

Fig.3-4 connections terminals for 10-30kVA

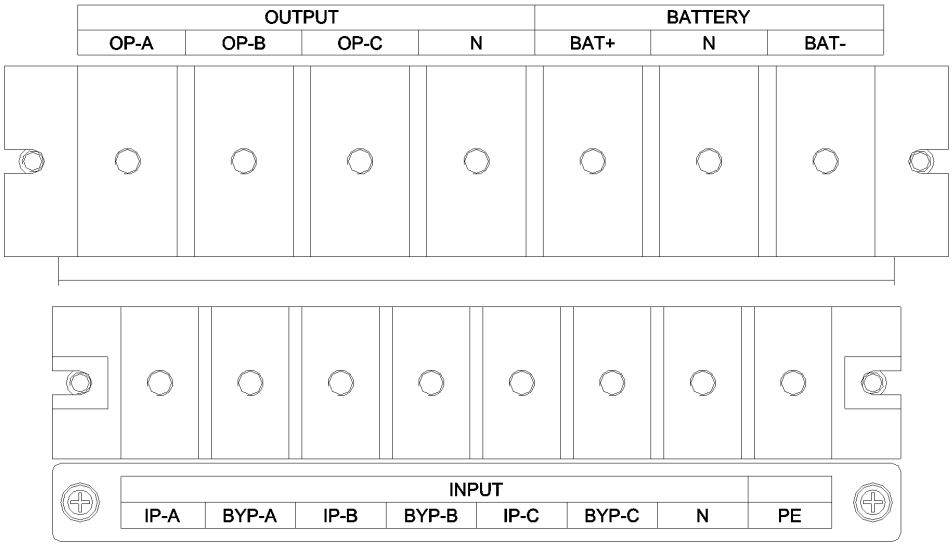

Fig.3-5 connections terminals for 40-60kVA model

3>Connect the protective earth wire to protective earth terminal (PE).

4>Connect the AC input supply cables to the Input terminal and AC output supply cables to the Output terminal.

5>Connect the Battery cables to the Battery terminal.

6>Check to make sure there is no mistake and re-install all the protective covers.

Note

mA, mB, mC standard for Main input phase A,B and C; bA, bB, bC standard for Bypass Input phase A,B and C.

	CAUTION
	The operations described in this section must be performed by authorized electricians or qualified technical personnel. If you have any difficulties, contact the manufacturer or agency.

	CAUTION
	1>Tighten the connections terminals to enough torque moment, refer to Table 3.3, and please ensure correct phase rotation. 2>The grounding cable and neutral cable must be connected in accordance with local and national codes. 3>When the cable holes does not goes through by cables, it should be filled by the hole stopper

3.7 Control and Communication Cables

The rear panel of the UPS provides dry contact interface and communication interface (RS232, RS485,SNMP ,Intelligent card interface and USB port), as it is shown in Fig.3-6.

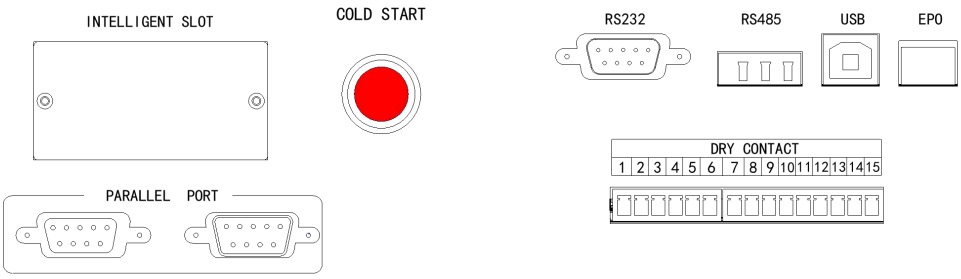

Fig.3-6 Dry contact &communication interface

3.7.1 Dry Contact Interface

The UPS is configured with 18 dry contact ports, which including 3 groups of input dry contact and 3 groups of output dry contact. The detail functions of the dry contact are shown in Table 3.6.

Table 3.6 Functions of the port

Port	Name	Function
1	IN_DRY1_NC	Input dry contact-1,1-2, (Normally closed)function is settable , Default: none
2	Vcc_GJ	VCC
3	IN_DRY2_NO	Input dry contact-2,3-4, (Normally open) function is settable , Default: None
4	GND	Ground for Vcc
5	IN_DRY3_NO	Input dry contact-3,5-6, (Normally open) function is settable , Default: None
6	GND	Ground for Vcc
7	OUT _DRY1_NO	Output dry contact-1, 7-9(Normally open) function is settable. Default: None

		If used for BCB_DRV,6-7, provide +15V voltage，20mA drive signal
8	OUT _DRY1_NC	Output dry contact-1, 8-9(Normally closed) function is settable. Default: None
9	OUT _DRY1_VCC	Common terminal for 7 and 8
10	OUT _DRY2_NO	Output dry contact-2, 10-12(Normally open), function is settable. Default: None
11	OUT _DRY2_NC	Output dry contact-2, 11-12(Normally closed), function is settable. Default: None
12	OUT _DRY2_GND	Common terminal for 10and 11,
13	OUT _DRY3_NO	Output dry contact-3, 13-15(Normally open), function is settable. Default: None
14	OUT _DRY3_NC	Output dry contact-3, 14-15 (Normally closed), function is settable. Default: None
15	OUT _DRY3_GND	Common terminal for 13 and 14

Note:

The settable functions for each port can be set by the monitor software or touch screen.

Specified temperature sensor is required for temperature detection (R25=5Kohm, B25/50=3275), please confirm with the manufacturer, or contact the local maintenance engineers when placing an order.

The output dry contact interface: An auxiliary dry contact signal will be activated via the isolation of a relay.

3.7.2 Communication Interface

RS232、RS485 and USB port：Provide serial data which can be used for commissioning and maintenance by authorized engineers or can be used for networking or integrated monitoring system in the service room.

Optional smart cards: SNMP card, GPRS card and Wi-Fi card etc.

The smart cards are installed in the optional card slot of UPS, which support hot-plug and feature convenient installation. Proceed as follows:

Step 1: first remove the cover plate from the intelligent slot;

Step 2: insert the required smart card into the slot;

Step 3: lock the smart card with previously removed screws.

SNMP card is compatible with today's popular Internet software and firmware and network operating system and provide direct the direct Internet access function for UPS to provide instant UPS data and power supply information, and achieve communication and management by communication network management systems, the network communication of UPSs and convenient centralized monitoring and management of each UPS. Please refer to supporting operation instruction for details.

4G card allows UPS to connect the Internet through 4G data (local SIM card is required), and the server for data communication, and UPS may be monitored online through computer or mobile phone. Please refer to supporting operation instruction for details.

GPRS card allows UPS to connect the Internet through GPRS data (local SIM card is required), and the server for data communication, and UPS may be monitored online through computer or mobile phone. Please refer to supporting operation instruction for details.

Wi-Fi card allows UPS to connect the Internet through Wi-Fi and the server for data communication, and UPS may be monitored online through computer or mobile phone. Please refer to supporting operation instruction for details.

4 LCD Panel

4.1 Introduction

This chapter introduces the functions and operation instructions of screen, and provide LCD display types, detailed menu information, prompt window information and UPS alarm information.

4.2 LCD panel for Cabinet

The structure of operation control and display panel for cabinet is shown in Fig.4-1. The operation control panel of UPS is located on the front panel of the cabinet. By operating the LCD, the UPS can be operated, controlled, and checked for all its parameters, operating status, and alarm information.

Fig.4-1 Control and display panel

The LCD panel for cabinet is divided into two functional areas: LED indicator,LCD touch screen.

4.2.1 LED Indicator

There are 2 color of LED indicator on the panel to indicate the operating status and fault. (See Fig.4-1).The description of indicators is shown in Table 4.1

Table 4.1 Status description of indicators

Indicators	State	Description
red	Steady red	UPS fault
	Flashing red	UPS alarming
green	Steady green	Power supply mode (mains mode, bypass mode, ECO mode, etc.)
No	None	Standby status or no starting

4.2.2 Alarm

There are two different types of audible alarm during UPS operation, as shown in Table 4.2.

Table 4.2 Description of audible alarm

Alarm	Description
Intermittent alarm	when system has general alarm (for example: AC fault),
Continuous alarm	When system has serious faults (for example: hardware fault)

	CAUTION
	When bypass frequency is over track, there is interruption time(less than 10ms) for transferring from bypass to inverter.

4.2.3 LCD Menu structure

The menu structure of the monitoring display interface is shown in Fig. 4-2.

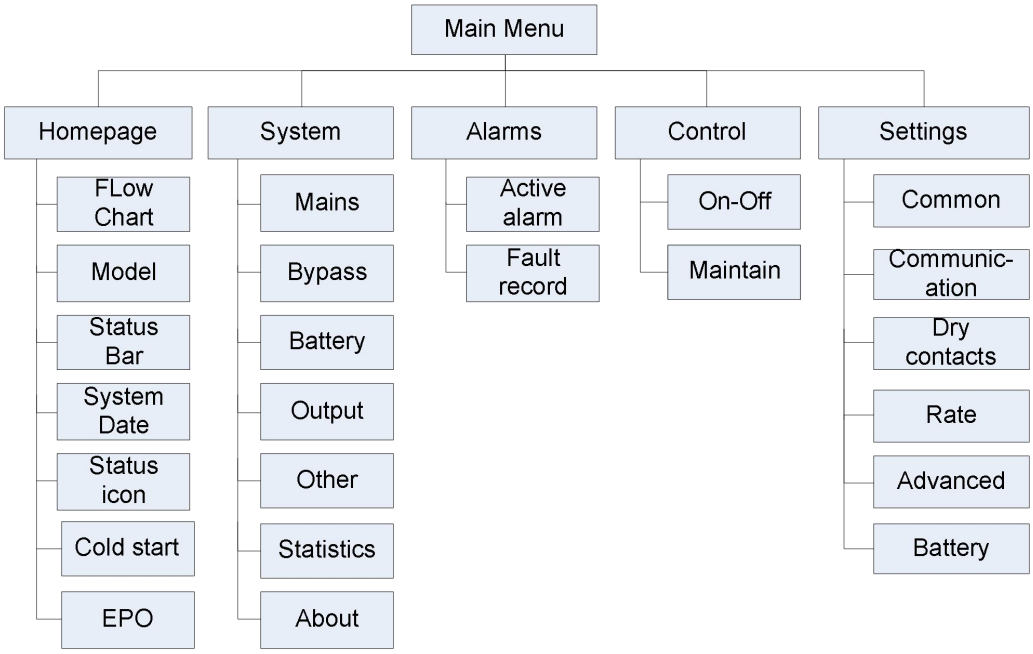

Fig. 4-2 Menu

4.2.4 Home page

About 3 seconds after the UPS is power on, the system enters the home page, following the welcome window. The home page is divided into four parts, including main menu, energy flow diagram, status bar and cold start button. The home page is shown in Fig. 4-3.

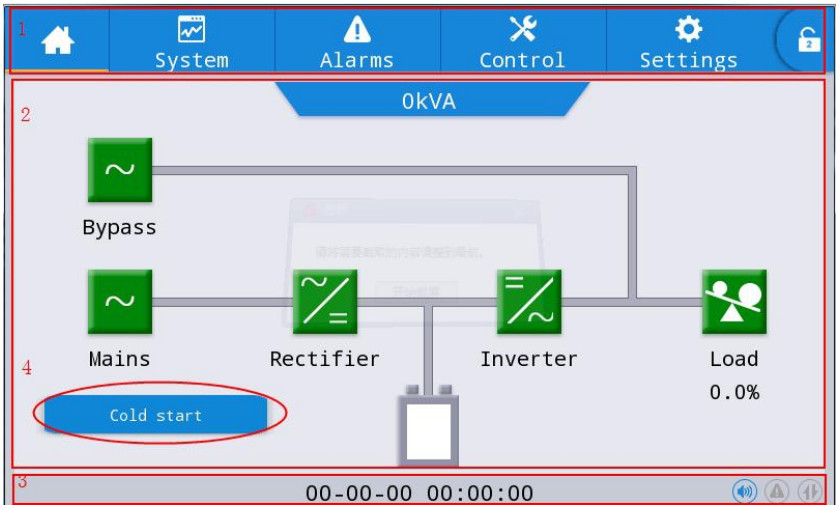

Fig. 4-3 Home page

Table 4-3 Function description of interface area

No.	Area	Function description
1	Main menu	Level 1 menu, including home page, system, alarm, control, settings, password login. The control and the settings are displayed in gray before login by password.

No.	Area	Function description
2	Energy flow diagram	Display the energy flow state of the cabinet. The specific status information can be viewed after clicking the corresponding working interface.
3	Status bar	Display operation status: working mode, system time, buzzer status, alarm status, HMI and monitoring communication status, USB status of the cabinet.
4	Cold start	Start up the UPS in battery mode. The icon will be hidden after two minutes.

Table 4-4 Description of icons in status bar

Icon	Function description
	Buzzer status, which becomes lit to indicate the buzzer enabled, and off to indicate the buzzer disabled
	Alarm status, which becomes lit to indicate an alarm, and off to indicate no alarm
	Password login/logout key. After clicking, enter user password or advanced password by the keyboard. The screen will be locked automatically.

Table 4-5 Description of password permissions

Password permissions	Default	Function description
User password	123456	Unlock On and OFF control right and the right of common settings and communication settings. It can be changed in "settings - common settings - user password".
Advanced password	Not opened	Unlock all control and setting rights. It can be used by qualified electricians only.

4.2.5 System

In the "System" information interface, the "Mains ", "Bypass ", "Battery ", "Output", "Other", "Statistics" and "About " information of the system can be inquired in the secondary menu at the left side.

Mains

The menu interface of the mains input is shown in Fig. 4-5, and displays information on three phases ABC from left to right. The interface description is shown in Table 4-6.

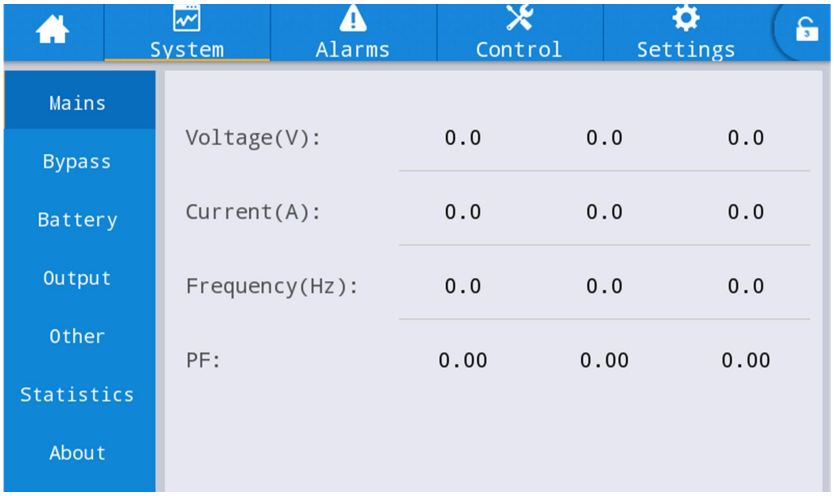

Fig. 4-4 Input interface

Table 4-6 Description of input interface

Display item	Description
Voltage (V)	Mains input phase voltage
Current (A)	Mains input phase current
Frequency (Hz)	Mains input frequency
PF	Mains input Power factor

Bypass

The menu interface of the bypass input is shown in Fig. 4-5, and the interface description is shown in Table 4-7.

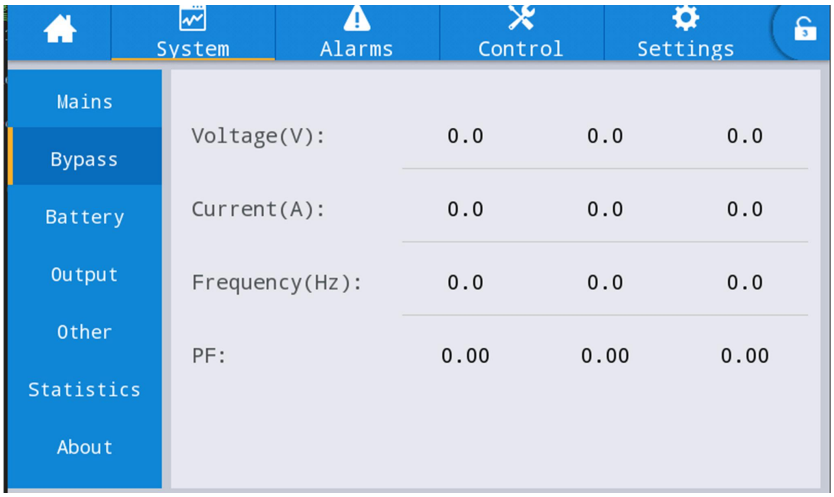

Fig. 4-5 Bypass interface

Table 4-7 Description of bypass interface

Display item	Description
Voltage (V)	Bypass input phase voltage
Current (A)	Bypass input phase current
Frequency (Hz)	Bypass input frequency
PF	Bypass input Power factor

Battery

The interface menu of battery input is shown in Fig. 4-6, and the interface description is shown in Table 4-8.

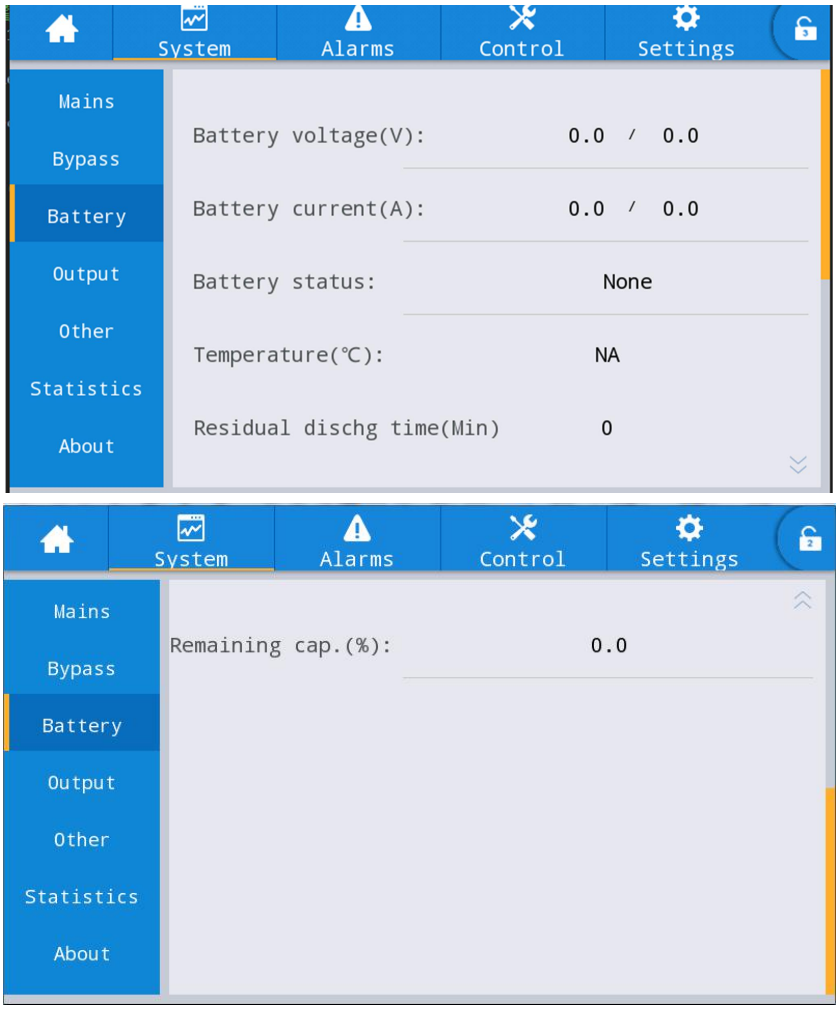

Fig. 4-6 Battery interface

Table 4-8 Description of battery interface

Display item	Description
Battery voltage (V)	Battery voltage
Battery Current (A)	Battery current
Battery status	Current battery status: idle, discharge, boost charge, floating charge, None
Temperature (˚C)	Current operating temperature of battery (optional battery temperature sensor, display "NA" if not connected)
Backup time (min)	Estimated discharge time of the battery at the current load
Remaining cap. (%)	Current remaining capacity of battery

Output

The interface of output menu is shown in Fig. 4-7, and the interface description is shown in Table 4-9.

Fig. 4-7 Output interface

Table 4-9 Description of output interface

Display item	Description
Voltage (V)	AC output phase voltage.
Current (A)	AC output phase current.
Frequency (Hz)	AC output frequency.
Load ratio (%)	Load rate of each phase of the machine, i.e. the ratio of actual power to rated power.
Active power (kW)	Output active power of each phase of the UPS unit
Appa. pow. (kVA)	Output apparent power of each phase of the UPS unit
Reactive power(kVA)	Output reactive power of each phase of the UPS unit
PF	Output power factor of each phase of the UPS unit

Other

The interface of other menu is shown in Fig. 4-8, and the interface description is shown in Table 4-10.

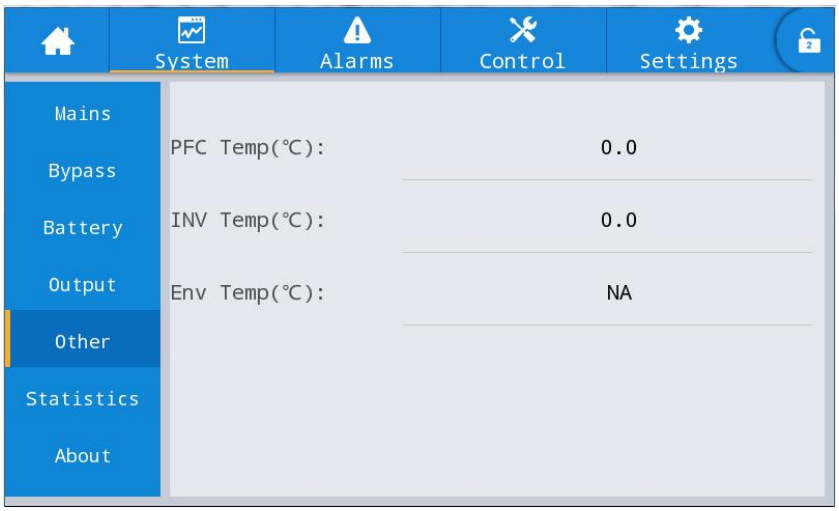

Fig. 4-8 Other interface

Table 4-10 Description of other interface

Display item	Description
PFC temperature	Rectifier temperature
INV temperature	Inverter temperature
Environmental temperature	Environmental temperature(optional battery temperature sensor, display "NA" if not connected)

Statistics

The interface of statistics menu is shown in Fig. 4-9, and the interface description is shown in Table 4-11.

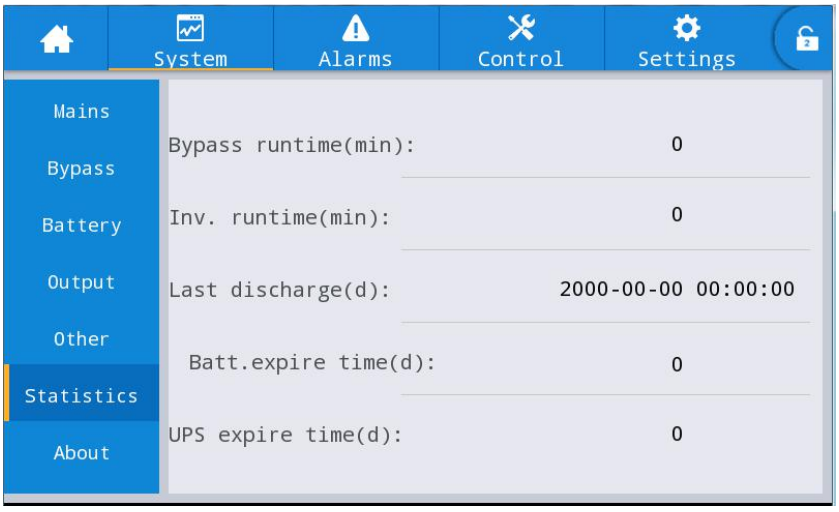

Fig. 4-9 Statistics interface

Table 4-11 Description of statistics interface

Display item	Description
Bypass runtime (min)	Accumulative operation time of UPS in bypass output status
Inv. Runtime (min)	Accumulative operation time of UPS in inverter output status
Last discharge (d)	Date of previous discharge status of UPS
Batt. expire time (d)	When the system time exceeds the warranty period, the status bar will prompt the warranty information of battery.

Display item	Description
UPS expire time (d)	When the system time exceeds the warranty period, the status bar will prompt the warranty information of main machine.

About

The interface of "About" menu is shown in Fig. 4-10, and the interface description is shown in Table 4-12.

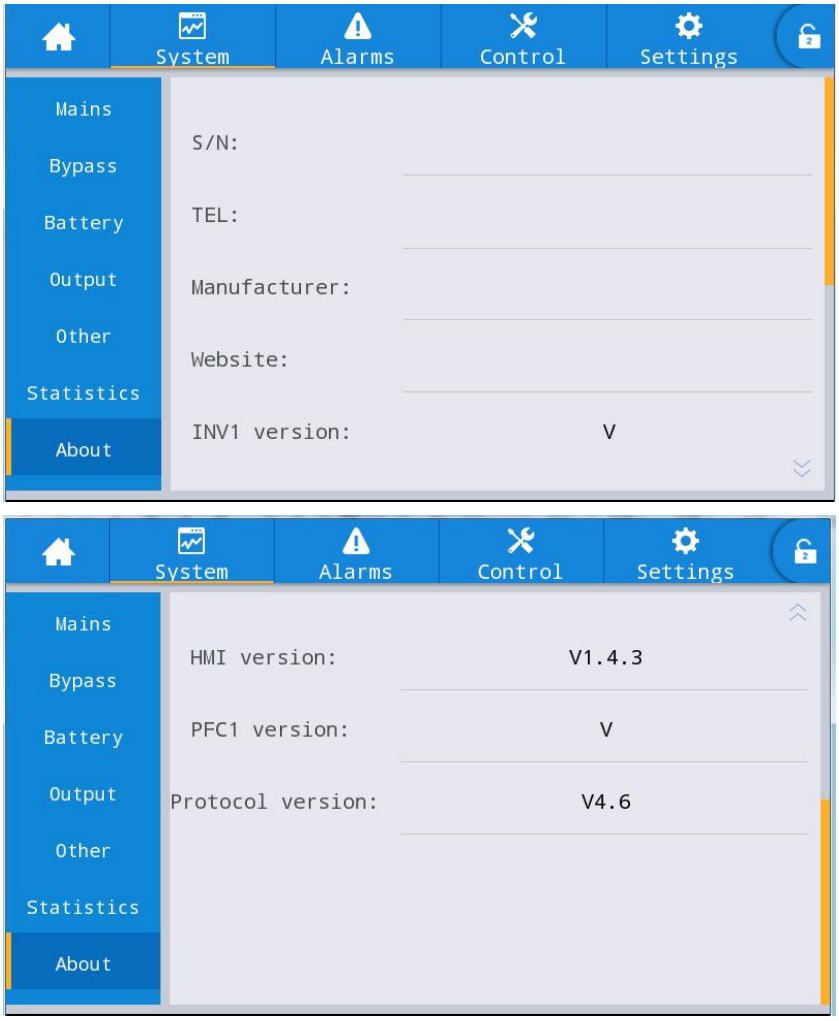

Fig. 4-10 About interface

Table 4-12 Description of Interface

Display item	Description
S/N	Production serial number of this machine.
TEL	Contact information of after-sales service providers.
Manufacturer	Manufacturer of this machine.
Website	Website of manufacturer of this unit.
HMI version	Program version of HMI display system.
PFC1 version	Program version of power rectifier system
Inv.1 version	Program version of power inverter system
Protocol version	Program version of LCD display system

4.2.6 Alarm

In the "Alarms" information interface, you can view "Active alarm" and "Fault record " from the secondary menu in the lower left corner. Click to select the type of alarm you want to view. The interface of alarm menu is shown in Fig. 4-11

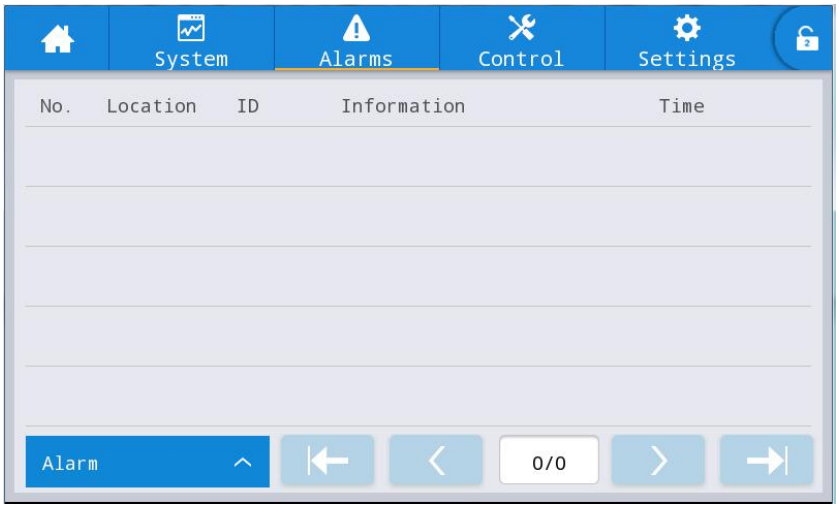

Fig. 4-11 Alarm menu interface

Active alarm

In "Active alarms" page, the current alarm code and information of the UPS are displayed, as shown in Table 4-13.

Table 4-13 Description of active alarm interface

Display item	Description
No.	Alarm number
Location	Display the cabinet number and module number of the current alarm source.
ID	Alarm code for program analysis.
Information	Current alarm name
Time	The current alarm is the current alarm information without time display.

History records

The "history record" display the UPS operating events and their occurrence time, such as alarms, faults, input power status and output power status. The interface description is shown in Table 4-14.

Table 4-14 Description of history record interface

Display item	Description
No.	Record number, which is listed in reverse order, that is to say the latest record is in the front.
Location	Displays the module number of the current record source.
ID	List code of fault, status or operation information for program analysis
Information	Current record name and record state (occurrence, disappearance).
Time	Record the time of occurrence or disappearance.

4.2.7 Control

In the "Control" information interface, you can select relevant operation from the left secondary menu, which contains "On-Off " and "Maintain".

On-Off

The interface of the “On-Off” menu is shown in Fig. 4-12, and the interface description is shown in Table 4-15.

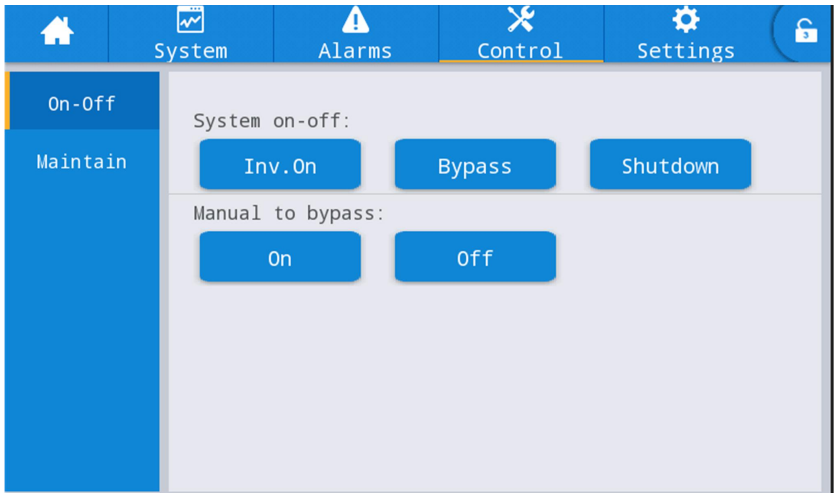

Fig. 4-12 On-Off interface

Table 4-15 Description of On-Off interface

Control item	Description
System on-off	“Inv.On” -- Start up the inverter of UPS; “Bypass” -- Power off the inverter of UPS, and switch the output to bypass. “Shutdown” -- turn off the inverter and output.
Manual to bypass	“On” -- Switch the output from inverter to bypass, if the bypass is normal, and keep the inverter on standby. “Off” -- Switch the output from bypass to inverter. This command take effect only after the “Manual to bypass On” has been performed. Otherwise, this button will be gray.

Maintenance

The interface of maintenance menu is shown in Fig. 4-13, and the interface description is shown in Table 4-16.

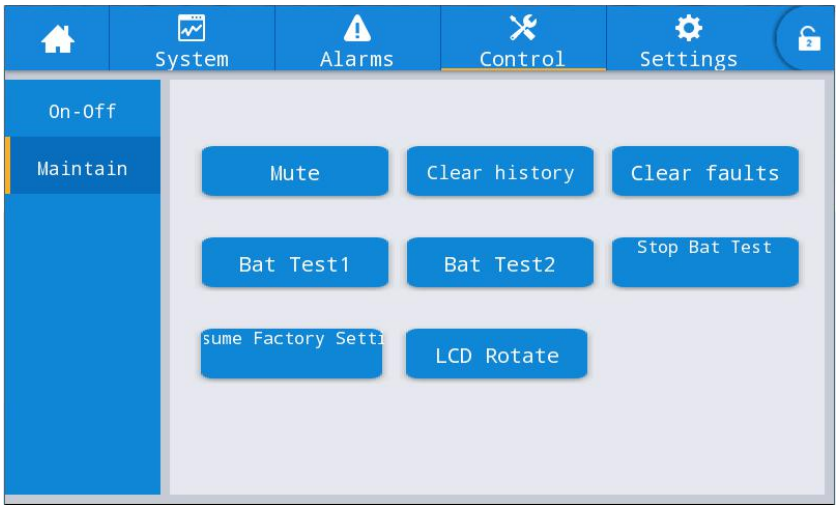

Fig. 4-13 Maintenance interface

Table 4-16 Description of maintenance interface

Control item	Description
Mute	Mute the buzzer
Clear history	Clear history
Faults Clear	Clear the fault
Bat Test1	This command will cause the UPS switches to battery mode to discharge 20 seconds to test whether the battery is normal. If the bypass is abnormal, or the battery capacity is lower than 25%, this command will not be taken effect.
Bat Test2	This command will cause the UPS switches to battery mode until the battery voltage is lower than DOD point. This test can activate battery by discharging deeply. If the bypass is abnormal, or the battery capacity is lower than 25%, this command will not be taken effect.
Stop Bat Test	Manually Stop the test including “Bat Test1” and “Bat Test2”.
Resume Factory Setting	Resume Factory Setting
LCD Rotate	LCD display direction switch

4.2.8 Settings

Common settings

The interface of common settings menu is shown in Fig. 4-14, and the interface description is shown in Table 4-17.

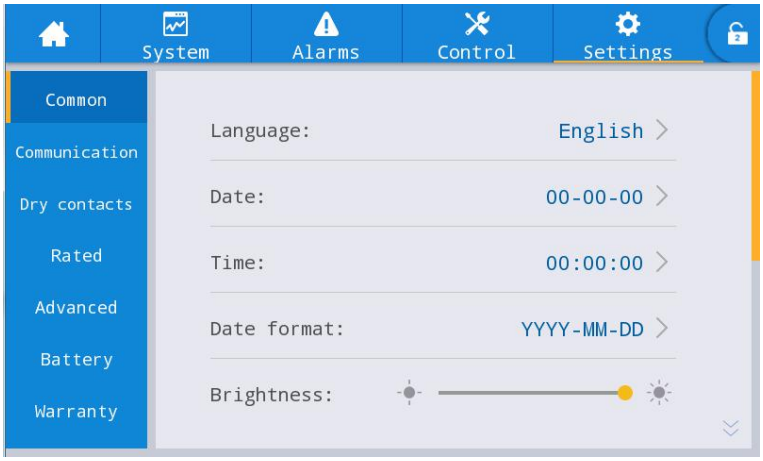

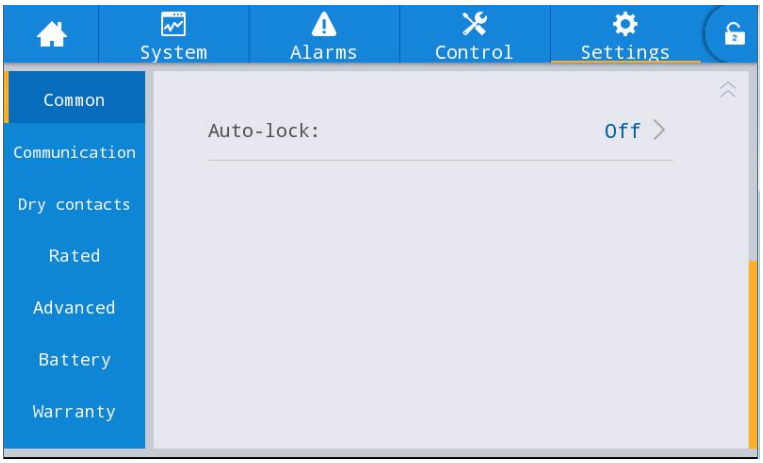

Fig. 4-14 Common setting interface

Table 4-17 Description of common setting interface

Setting item	Default	Options	Description
Language	English	English	Display in English.
YYYY-MM-DD	2016-01-01	2000-01-01~2099-12-31	Set the current date.
Time	00:00:00	00:00:00~23:59:59	Set the current time.
Date format	Y-M-D	Y-M-D, M-D-Y, D-M-Y	Support 3 formats: Y-M-D, M-D-Y, D-M-Y.
Brightness	100%	0% ~ 100%	Adjust backlight brightness by moving the slider.
Auto-lock	5 min	0 ~ 30 min	Set screen time out. 0 is set to keep the screen on.

Communication settings

The interface of the communication setting menu is shown in Fig. 4-15, and the interface description is shown in Table 4-18.

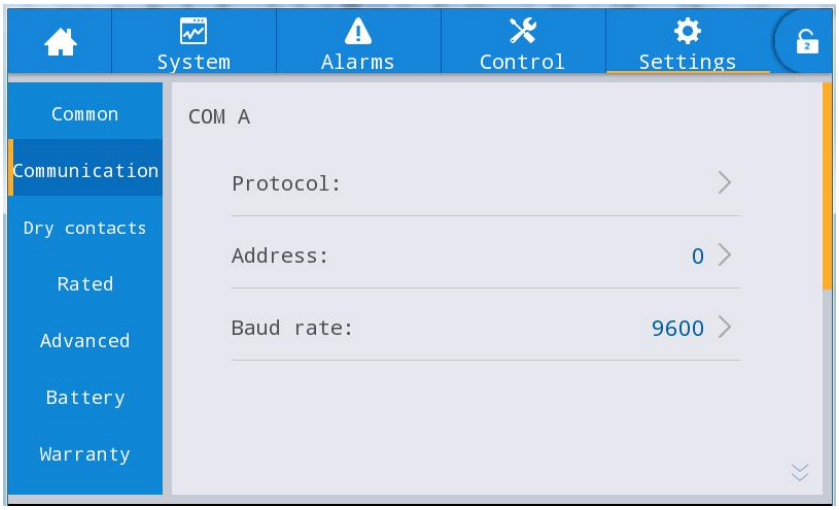

Fig. 4-15 Communication settings interface

Table 4-18 Description of communication settings interface

Setting item	Default	Options	Description
Protocol	MODBUS RTU	MODBUS RTU, EA	Settings such as Protocol, Address and Parity are set for serial ports, including USB interface, RS232 interface and RS485
Address	0	0~ 247	

Setting item	Default	Options	Description
Baud rate	9600	2400-19200	interface. Users can make the corresponding settings according to the setting requirements of the monitoring software used, but ensure that the setting value in the monitoring software must be consistent with the value in the UPS communication settings.

Dry contact settings

The interface of dry contact setting menu is shown in Fig. 4-16, and the interface description is shown in Table 4-19.

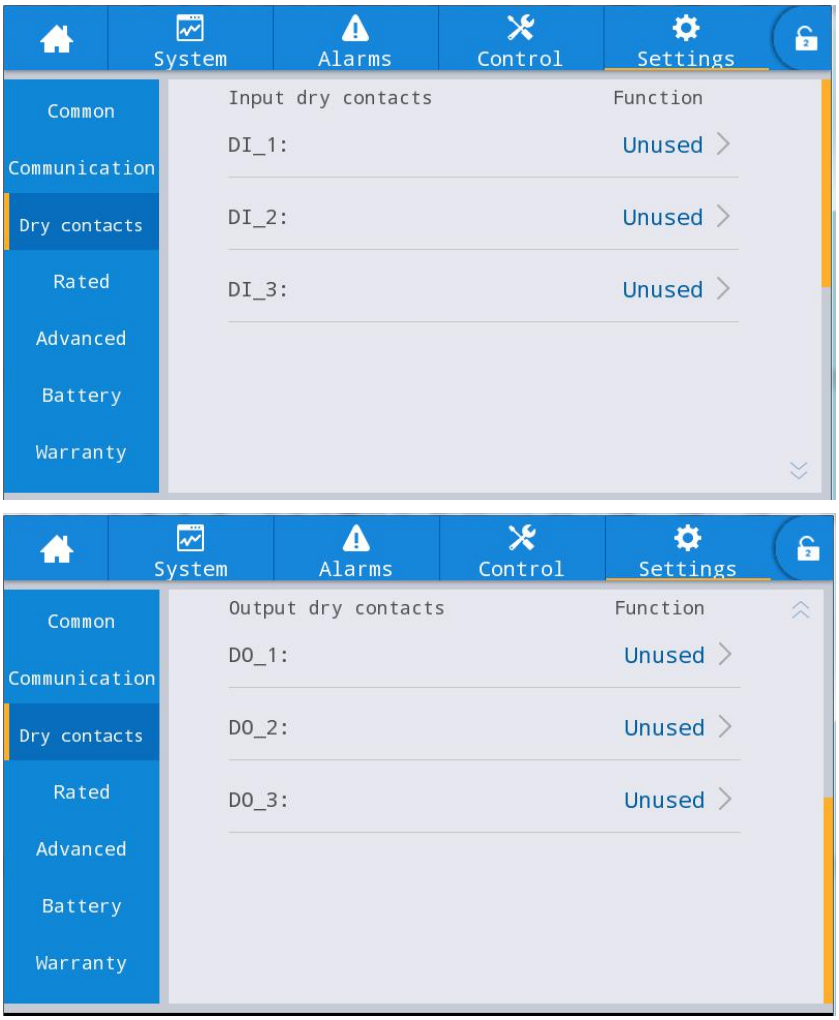

Fig. 4-16 Dry contact setting interface

Table 4-19 Description of dry contact setting interface

INTERFACE	Name	Function
Input Dry Contact DI_1 ~ DI_3	D.G.mode	Connection status of electric generator
	EPO	Emergency power off trigger signal. Only DI_1 can be configured for this function.
	BCB	Connection status of BCB (Battery current breaker). DI_2 and DI_3 are recommend to configured for this function.
	BCB status	BCB contact status, connect with the normally open signal of BCB. DI_2 and DI_3 are recommend to configured for this function.
	INV	Transfer from the bypass to inverter. This dry contact signal takes effect only when the UPS works in bypass mode and the inverter of UPS is standby.

INTERFACE	Name	Function
	Bypass	Transfer from the inverter to bypass, if the bypass is normal.
	Fault clear	Fault clear
	Batt over charge	When this input dry contact is triggered, it means that the battery is over charging. The UPS will turn off the charger.
	Low batt.volt.	The battery voltage is low, the ups will get ready to shutdown or recharge.
Output Dry Contact DO_1~ DO_3	Grid Fault	Grid Fault warning.
	Low.Bat.vol	The battery voltage is low.
	Load on bypass	The UPS works in bypass mode.
	Load on INV	The UPS works in normal mode.
	Battery Mode	The UPS works in battery mode.
	General Alarm	General Alarm. This output dry contact will be triggered when the UPS generates one or more alarms.
	Output over load	The inverter of UPS is over load.
	BCB drive	This output dry contact can output a 15V/20mA drive signal for BCB control board when the UPS is discharge to EOD in battery mode. The BCB control board can use this signal to drive battery breaker off.

Rate parameters

The interface of the rate parameters menu is shown in Fig. 4-17, and the interface description is shown in Table 4-20.

Fig. 4-17 Bypass parameters interface

Table 4-20 Description of bypass parameters interface

Setting item	Default	Options	Description
Rate output freq	50	50/60	Rate output frequence
Rate output voltage	220	100/110/120/127/200/208/220/230/240	Rate output voltage
Rate input freq	50	50/60	Rate input frequence
Rate input voltage	220	100/110/120/127/200/208/220/230/240	Rate input voltage

Advanced parameters

The interface of advanced parameters menu is shown in Fig. 4-18, and the interface description is shown in Table 4-21.

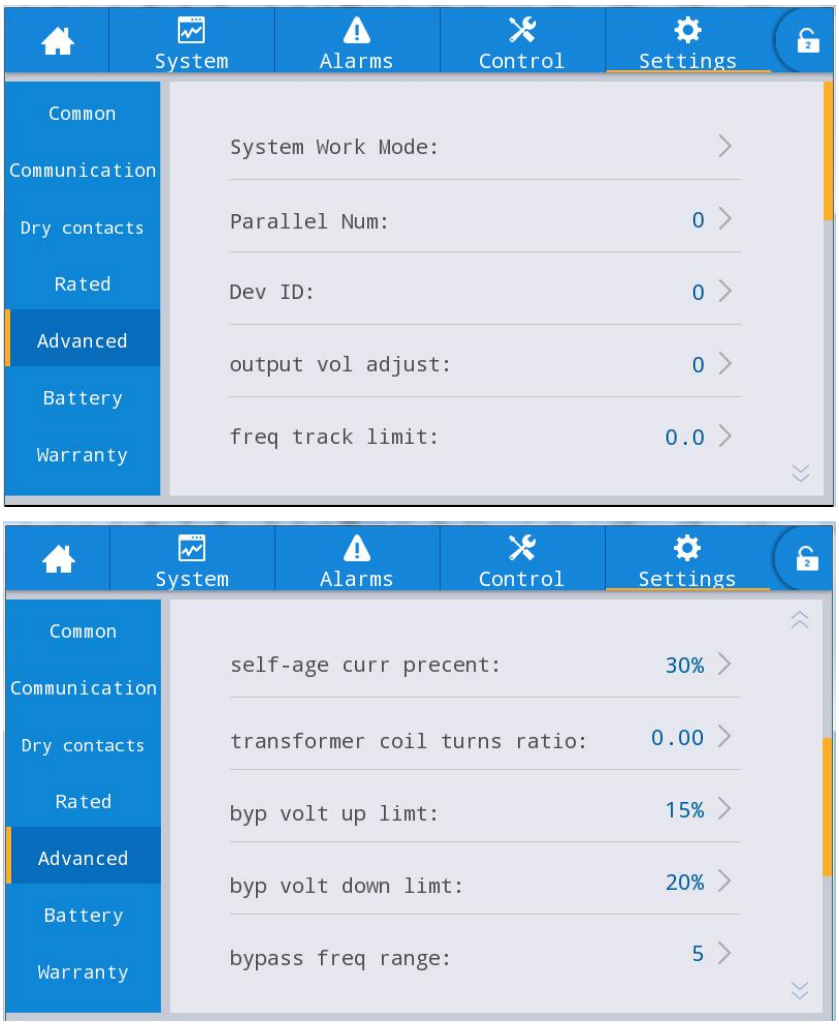

Fig. 4-18 Advanced parameters interface

Table 4-21 Description of advanced parameters interface

Setting item	Default	Options	Description
System Work Mode	Normal	Single/ECO/Self-load/ Parallel mode	Select the corresponding working mode according to user needs. It is normal working mode in general.
Parallel Number	1	1 ~ 4	Set according to the actual parallel numbers of the UPS system installed by the user.
Dev ID	1	1 ~ 16	Set device parallel ID
Output voltage adjust	0	-5.0 ~ 5.0	Fine tune the output voltage according to the customer's field power distribution.
Freq track limit	±3Hz	±0.5Hz ~ ±5Hz	Settable, ±0.5Hz ~ ±5Hz, default ±3Hz
Self-age curr precent (%)	80	30 ~ 100	It is percentage of output current in rated output current in self-aging mode.
Transformer coil turns ratio	1	settable	Set the output transformer coil turns ratio.
Byp volt up limt	+15%	+10%, +15%, +20%, +25%	Upper limit: +10%, +15%, +20%, +25%
Byp volt down limt	-20%	-10%, -15%, -20%, -30%, -40%	Lower limit: -10%, -15%, -20%, -30%, -40%

Setting item	Default	Options	Description
bypass frq range	±5.0	±1.0/±2.0/±3.0/±4.0/±5.0/±6.0	Note that the bypass frequency range cannot be less than the ECO frequency range.
Frequency slew rate(Hz/S)	1	0.5-5.0	Frequency slew rate
Output with motor	Off	On/close	Output with motor or no

Battery parameters

The interface of battery parameters menu is shown in Fig. 4-19, and the interface description is shown in Table 4-22.

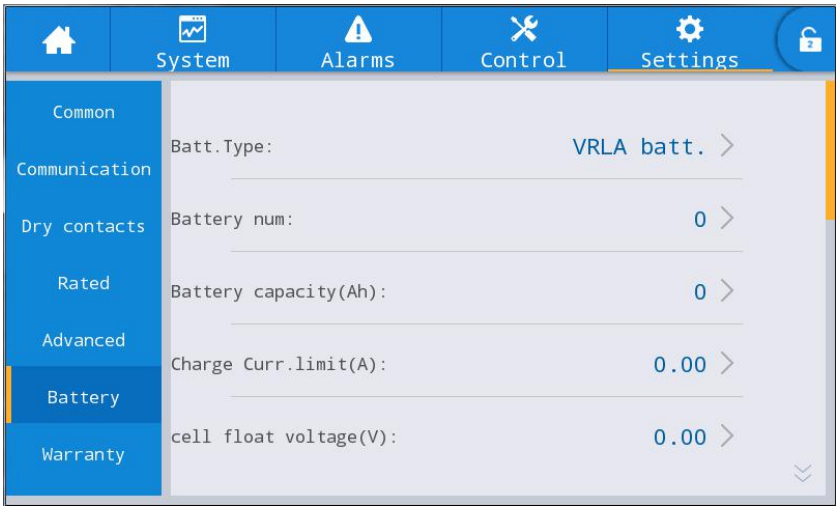

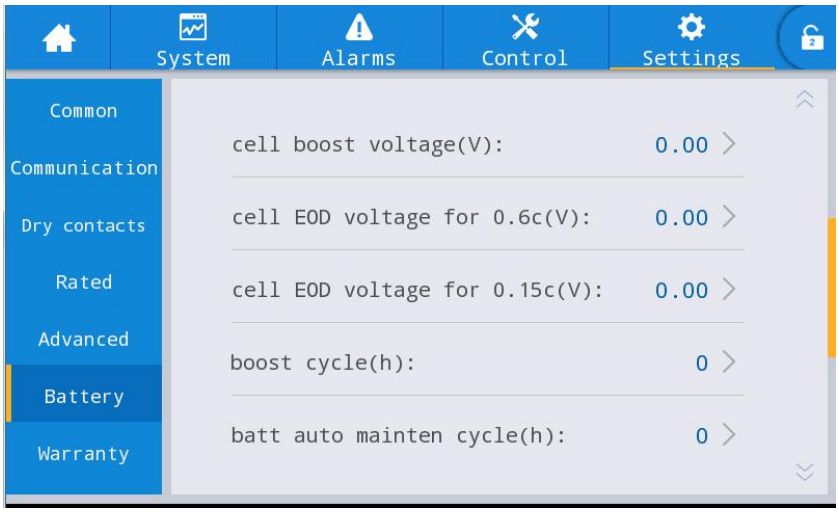

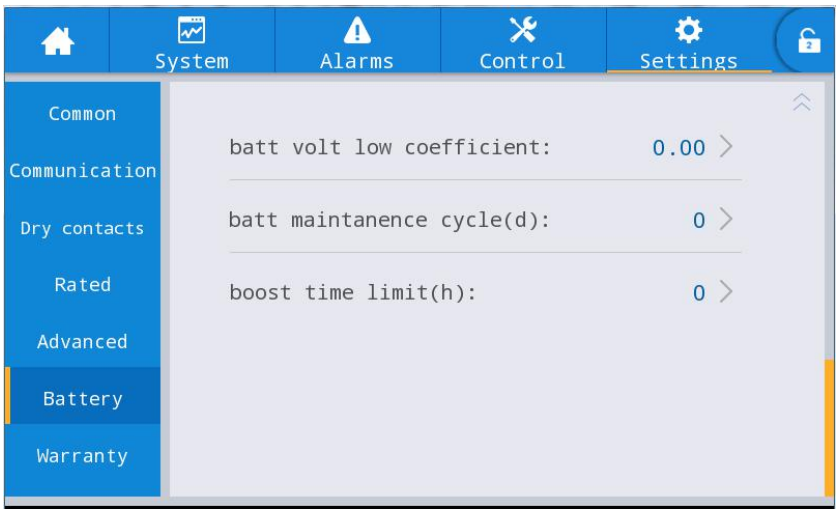

Fig. 4-19Battery parameters interface

Table 4-22 Description of battery parameters interface

Setting item	Default	Options	Description
Batt.Type	VRLA batt.	Lithium/VRLA	Battery type: VRLA battery and Lithium battery, The supported lithium battery type is 3.2 V lithium iron phosphate battery.
Battery number	40	settable	Actual batteries number of UPS system. The effective setting range is 32 ~ 40.
Battery capacity (Ah)	25	settable	Single battery capacity connected to the UPS system. This value will affect the residual discharge time value and the maximum charge current.
Charge curr.limit(A)	1	10	When the battery type is set to lead-acid battery, the actual charge current also be limited by “Battery capacity” value. The maximum charge current will not exceed to 0.2 times the “Battery capacity”.
Boost time limit	2	1-48	Set according to the needs.
Cell float voltage	2.25	2.10 ~ 2.35	Charging voltage of single cells under floating charge condition.
Cell boost voltage	2.37	2.20~2.45	Charging voltage of single cells under boost charge condition.
Cell EOD voltage for 0.6C	1.6	1.6~1.85	Set according to the needs.
Cell EOD voltage for 0.15C	1.8	1.65~1.9	Set according to the needs.
Boost cycle	1440	1~3000h	Set according to the needs.
Batt auto mainten cycle	2880	720~30000 h	This test will lead to the battery being partly discharged to activate battery until battery voltage is low. Bypass must be in normal condition, the battery capacity should be above 25%.
Batt volt low coefficent	1.1	1.05~1.25	Set according to the needs.
Batt mainten cycle	3000	0-3000d	Set according to the actual battery replacement time for the users.

Warranty parameters

The interface of warranty parameters menu is shown in Fig. 4-20, and the interface description is shown in Table 4-23.

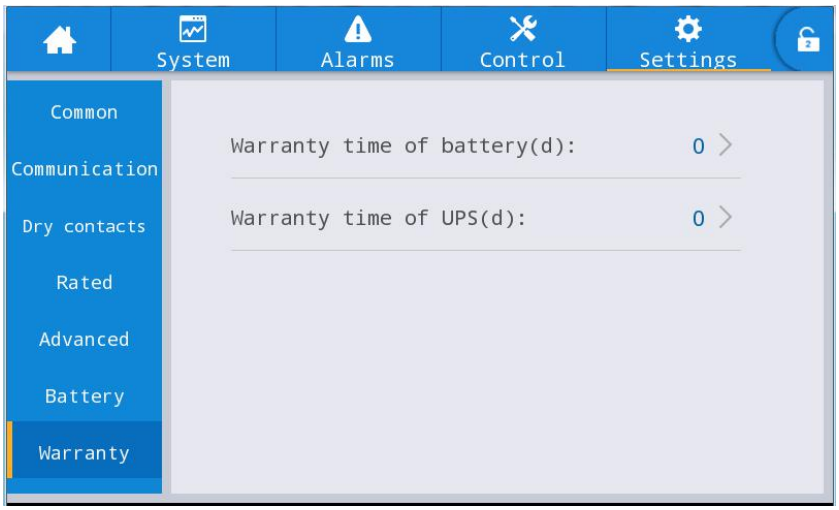

Fig. 4-20 warranty parameters interface

Table 4-23 Description of warranty parameters interface

Setting item	Default	Options	Description
Warranty time of battery (d)	395	settable	The time when the battery is out of warranty
Warranty time of UPS(d)	1125	settable	The time when the UPS is out of warranty

4.3 Event List

The following Table4.7 gives events of UPS History Log

Table 4.7 List of History Log

String Sequence	LCD Display	Explanation
230	Battery voltage low (DOD)	Battery voltage is low
231	Battery end of discharge (EOD)	Battery End Of Discharge
232	Bypass fail	Bypass Fail
233	Fan fail	Fan fail
245	UPS maintenance breaker close	Maintenance CB is Closed
336	System board and inverter module CAN communication abnormal	System board and inverter module CAN communication abnormal
337	Same address of multiple inverter	address of multiple inverter is same
352	CAN communication abnormal between system board	CAN communication abnormal between system board
366	Frequency beyond tracing range	Bypass Frequency Over Track Range
368	Bypass phase over voltage	Bypass voltage abnormal
369	Bypass phase under voltage	Bypass voltage abnormal
370	Bypass over frequency	Bypass frequency abnormal
371	Bypass under frequency	Bypass frequency abnormal
372	Bypass phase sequence error	Bypass voltage Sequence is reverse
373	Bypass phase loss	Utility (Grid) Abnormal
374	Bypass phase volt imbalance	Bypass voltage is not balance

String Sequence	LCD Display	Explanation
375	Bypass voltage rapid inspection abnormal	Bypass voltage Sequence is reverse
376	Bypass overcurrent	Bypass overcurrent
377	ECO bypass overvoltage	Bypass voltage abnormal in ECO model
378	ECO bypass undervoltage rapidly	Bypass voltage abnormal in ECO model
379	ECO bypass overfrequence	Bypass frequence abnormal in ECO model
380	ECO bypass underfrequence	Bypass frequence abnormal in ECO model
381	ECO bypass undervoltage rapidly	Bypass under voltage rapidly in ECO model
382	ECO bypass phase sequence error	Bypass phase sequence error in ECO model
383	ECO bypass neutral loss	Bypass neutral loss in ECO model
396	Bypass radiator overtemperature	Bypass radiator over temperature
418	Battery maintenance reminder	Battery maintenance reminder
419	Battery discharging time ended	Battery discharging until time ended
420	Battery discharge voltage ended	Battery End Of Discharge
421	Battery over temperature	Battery over temperature
422	Battery under temperature	Battery under temperature
423	Battery self check fail	Battery Test fails
451	Bypass abnormal	Bypass voltage or frequence abnormal
452	Output abnormal	Output voltage or frequence abnormal
464	Input over voltage	Input voltage abnormal
465	Input under voltage	Input voltage abnormal
466	Input over frequency	Input frequency abnormal
467	Input under frequency	Input frequency abnormal
468	Input phase sequence error	Input phase sequence is reverse
469	Input phase loss	Input phase loss
470	Input voltage imbalance	Input voltage is not balance
471	input voltage rapid inspection abnormal	Output shorted Circuit
472	Input over current	Input over current
473	Input current imbalance	Input current is not balance
474	Input null wire loss	Input Grid Neutral Lost
475	Input fuse failure	Input fuse failure
476	Input power limited	Input power limited
477	Frequent switching between grid and battery	Transfer times (from grid to battery) in 1 hour exceed the limit.
478	Input overload	Input overload
479	Reserved	
480	Battery disconnect	Battery cables Disconnected.
481	Battery overtemperature	Battery overtemperature
482	Battery self check fail	Battery Test fails
483	Battery overvoltage	Battery overvoltage
484	Battery undervoltage DOD	Battery voltage is lower than "low voltage warming" point when discharging

String Sequence	LCD Display	Explanation
485	Battery undervoltage EOD	Battery voltage is lower than "end of discharge" point when discharging
486	Battery over-charging	Battery over-charging
487	Battery temperature low	Battery temperature low
488	Battery hardware overvoltage failure	Battery hardware overvoltage failure
489	Battery charging overcurrent	Battery charging overcurrent
490	Battery discharging overcurrent	Battery discharging overcurrent
491	Open circuit of charger switch	Charger relay is open
492	Charger switch short circuit	Charger relay short circuit
493	Battery discharge overtime	Battery discharge overtime
494	Reverse battery connection	Battery pole (positive and negative)are reverse
495	battery neutral Lost	battery neutral Lost
521	PFC soft start fail	PFC soft start fail
528	Rectifier IGBT module over temperature	Rectifier over temperature
529	Rectifier E2PROM read-write failure	Rectifier E2PROM read-write failure
546	Charger soft start fail	Charger soft start fail
547	Charger over voltage	Charger fail
548	Charger hardware overvoltage failure	Charger fail
549	Charger under-voltage	Charger fail
568	Lithium battery charge primary protection	The charge primary protection of Lithium battery BMS system has been triggered
569	Lithium battery discharge primary protection	The discharge primary protection of Lithium battery BMS system has been triggered
570	Lithium battery charge secondary protection	The charge secondary protection of Lithium battery BMS system has been triggered
571	Lithium battery discharge secondary protection	The discharge secondary protection of Lithium battery BMS system has been triggered
572	Lithium battery charge tertiary protection	The charge tertiary protection of Lithium battery BMS system has been triggered
573	Lithium battery discharge tertiary protection	The discharge tertiary protection of Lithium battery BMS system has been triggered
574	Lithium battery charge warning	Lithium battery charge abnormal
575	Lithium battery discharge warning	Lithium battery discharge abnormal
576	Input abnormal	Input abnormal
592	Bus-bar short circuit	DC bus shorted Circuit
593	Bus-bar abnormal	Bus-bar abnormal
594	Bus-bar overvoltage	DC bus over Voltage
595	Bus-bar under voltage	DC bus under Voltage
596	Bus-bar voltage imbalance	DC bus voltage imbalance
608	Inverter overvoltage	Inverter overvoltage

String Sequence	LCD Display	Explanation
609	Inverter under voltage	Inverter under voltage
610	Inverter voltage imbalance	Inverter voltage imbalance
611	DC component exceeded	DC component exceeded
612	Inverter module 105% overload	Inverter Over Load 105%Timeout
613	Inverter module 110% overload	Inverter Over Load 110%Timeout
614	Inverter module 125% overload	Inverter Over Load 125%Timeout
615	Inverter module 150% overload	Inverter Over Load 150%Timeout
616	Short circuit of inverter output	Output shorted Circuit
617	Inverter module overload alarm	Inverter Over load
626	BYP 125% overload	BYP Over Load 125%Timeout
627	BYP 135% overload	BYP Over Load 135%Timeout
628	BYP 150% overload	BYP Over Load 150%Timeout
629	BYP 200% overload	BYP Over Load 200%Timeout
630	Bypass overload alarm	Bypass Over load
640	Inverter soft start fail	Inverter soft start fail
641	Phase lock fail	Phase lock fail
642	Frequent switching between bypass and inverter	Transfer times (from inverter to bypass) in 1 hour exceed the limit.
643	Inverter soft start times reached	Inverter soft start times reached
644	Parallel operation current imbalance	Parallel operation current imbalance
645	Capture failure	Capture failure
646	Load strike	Load strike
647	Adjacent UPS request switching to bypass	Adjacent UPS request switching to bypass
648	Parallel operation wire abnormal	Parallel cable in error
649	Driver connection failure	Driver connection failure
650	Synchronous square wave abnormal	Synchronous square wave abnormal
651	Inverter self check failure	Inverter self check failure
656	Inverter radiator over temperature	Inverter Over Temperature
657	Inverter E2PROM operation failure	Inverter E2PROM operation failure
658	Inverter DSP and monitor communication failure	Inverter DSP and monitor communication failure
663	Emergency shutdown	Emergency Power Off
672	Inverter relay open circuit	Inverter relay open circuit
673	Inverter relay short circuit	Inverter relay short circuit
676	SPI communication failure between rectifier and inverter	SPI communication failure between rectifier and inverter
688	Output overvoltage	Output overvoltage
689	Output undervoltage	Output undervoltage
704	inverter fast check fail	inverter fast check fail
705	inverter Negative power fault	inverter Negative power fault

5 Operations

5.1 UPS Start-up

5.1.1 Start from Normal Mode

The UPS must be started up by commissioning engineer after the completeness of installation. The steps below must be followed：

1>Ensure all the circuit breakers are open and the UPS output is not shorted..

2>Close the output breaker and input breaker, and then the UPS starts initializing. If the system has dual inputs, close both of the input breaker and bypass breaker.

3>The LCD in front of the cabinet is lit up. The system enters the home page, as shown in Fig.4-2.

4>Notice the energy bar in the home page, and pay attention to the LED indicators.

5>After 30S, Bypass static switch closes, and the output is powered by bypass. Then the inverter is starting up. If the parameter “Input with transformer” is enable, the bypass will not work during starting up.

6>The UPS transfers from the bypass to inverter after the inverter goes normal.

7>The UPS is in Normal Mode. Close the battery circuit breakers and the UPS starts charging the battery.

8>The starting up done.

Note

- When the system starts, the stored setting will be loaded.
- Users can browse all incidents during the process of the starting up by checking the history record Log.

5.1.2 Start from Battery

The start for battery model is referring to battery cold start. The steps for the start-up are as follows：

1.Confirm the battery is correctly connected.

2.close the external battery breakers, and press the red button (located at the communication interface in front of UPS) after 60s. The UPS will be powered by the battery and the LCD enters the home page.

3.After that, press the button for cold start on the LCD, as shown in Fig. 5-1. The UPS will start up and the system transfers to battery mode in 30S.

4.Close the external output power supply isolation to supply the load, and the system is working on battery model.

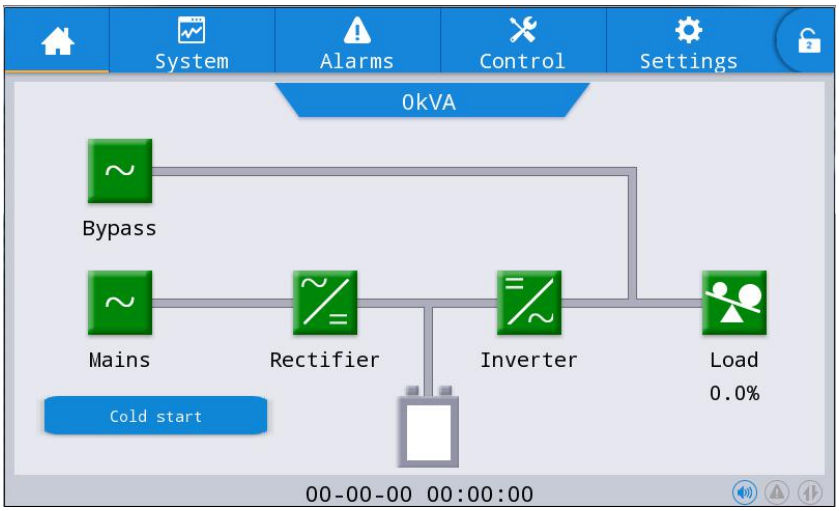

Fig. 5-1 The cold start button in LCD

5.2 Procedure for Switching between Operation Modes

5.2.1 Switching the UPS into Battery Mode from Normal Mode

The UPS transfers to Battery model immediately after input breaker disconnects from the utility or the input AC power is abnormal.

5.2.2 Switching the UPS into Bypass Mode from Normal Mode

Follow the path by selecting the icon of “ON” to transfer the system to Bypass Mode, as shown in Fig. 5-2.

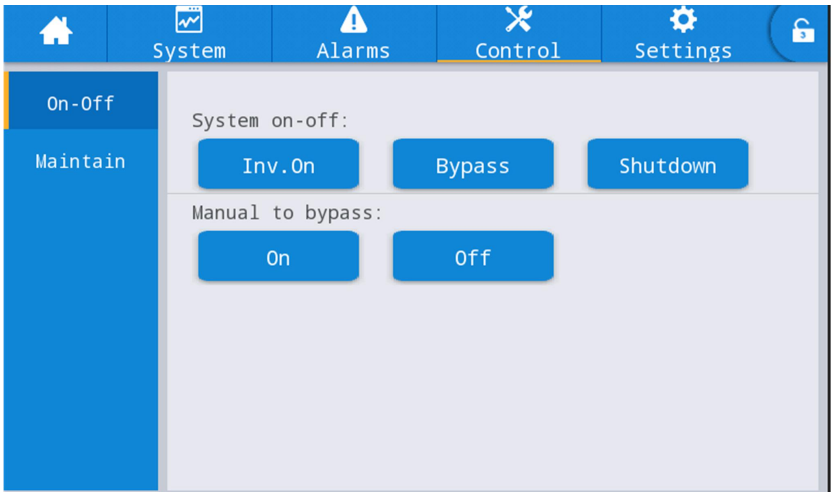

Fig. 5.2 Operation for switching the UPS into bypass mode

	WARMING
	Ensure the bypass is working normally before transferring to bypass mode. Or it may cause failure.

5.2.3 Switching the UPS into Normal Mode from Bypass Mode

Follow the path by selecting the icon of “Off”, the system transfer to Normal Mode.

Note

Normally, the system will transfer to the Normal mode automatically. This function is used when the frequency of the bypass is over track and when the system needs to transfer to Normal mode by manual.

5.2.4 Switching the UPS into Maintenance Bypass Mode from Normal Mode

These following procedures can transfer the load from the UPS inverter output to the maintenance bypass supply, which is used for maintaining the UPS.

1>Transfer the UPS into Bypass mode following section 5.2.2.

2>Open the battery breaker and close the maintenance bypass breaker. Then the load will be powered through maintenance bypass and static bypass.

3>The load is powered through maintenance bypass.

	WARMING
	1>Follow the path by selecting the icon of “Off”, the system transfer to Normal Mode.Once the cover on the maintenance bypass breaker is removed, the system will transfer to bypass mode automatically.

	2>Before making this operation, confirm the messages on LCD display to be sure that bypass supply is regular and the inverter is synchronous with it, so as not to risk a short interruption in powering the load.

	DANGER
	1>Even with the LCD turned off, the terminals of input and output may be still energized . 2>If you need to maintain the power module, wait for 10 minutes to let the DC bus capacitor fully discharge before removing the cover.

5.2.5 Switching the UPS into Normal Mode from Maintenance Bypass Mode

These following procedures can transfer the load from the Maintenance Bypass mode to inverter output.

1.After finish of maintenance, close the bypass breaker and the bypass static switch will be turned on in 30S after the LCD touch screen goes on, the bypass energy bar is ok and the load is powered through maintenance bypass and static bypass.

2.Turn off the maintenance bypass switch and fix the protection cover, and then the load is powered through bypass. The rectifier starts followed by the inverter.

3.After 60S, the system transfers to Normal mode.

	WARMING
	The system will stay on bypass mode until the cover of maintenance bypass breaker is fixed.

5.3 Battery Maintenance

If the battery is not discharged for a long time, it is necessary to test the condition of the battery.

Enter the menu “maintain”, as is shown in Fig.5-2 and select the icon “Bat Test 2”, the system transfers into the Battery mode for discharging. The system will discharge the batteries until the alarm of “Battery low voltage” is given. Users can stop the discharging by the “Stop Bat Test” icon.

With the icon of “Bat Test 1”, batteries will be discharged for about 30 seconds, and then re-transfer to normal mode.

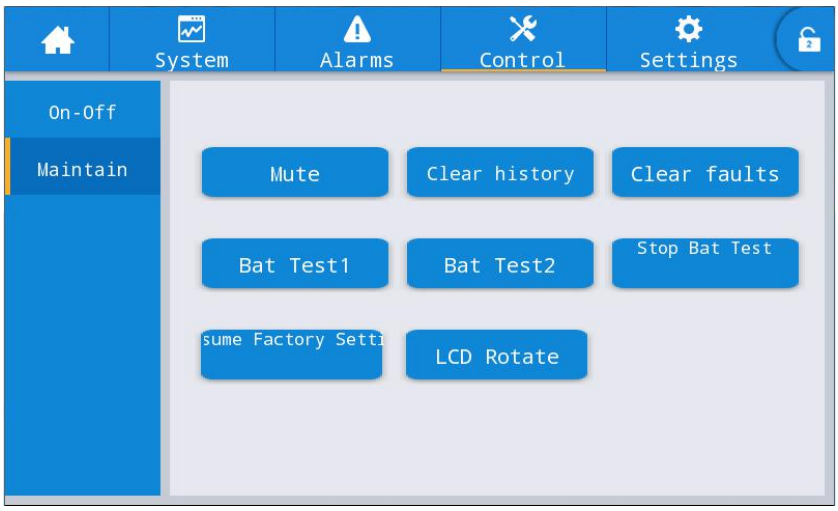

Fig. 5-4 Battery maintenance page

5.4 EPO

The EPO button located on the home page (see Fig.5-3) is designed to switch off the UPS in emergency conditions (e.g., fire, flood, etc.).To achieve this, just press the EPO button, and the system will turn off the rectifier, inverter and stop powering the load immediately (including the inverter and bypass output), and the battery stops charging or discharging.

If the input utility is present, the UPS control circuit will remain active; however, the output will be turned off. To completely isolate the UPS, users need to open the external mains input supply to the UPS

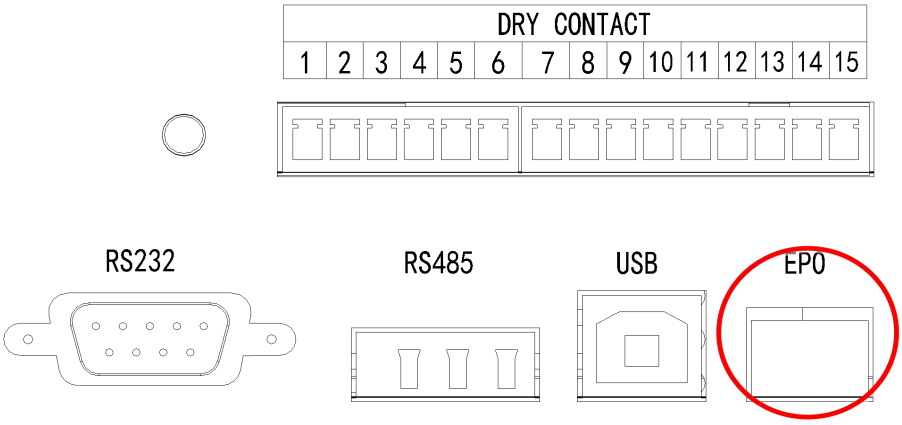

Fig. 5-5 EPO port in communication interface

	WARMING
	When the EPO is triggered, the load is not powered by the UPS. Be careful to use the EPO function.

5.5 Installation of Parallel Operation System

5.5.1 Parallel system diagram

Up to four UPS could be paralleled， with a diagram as shown in Fig.5-5.

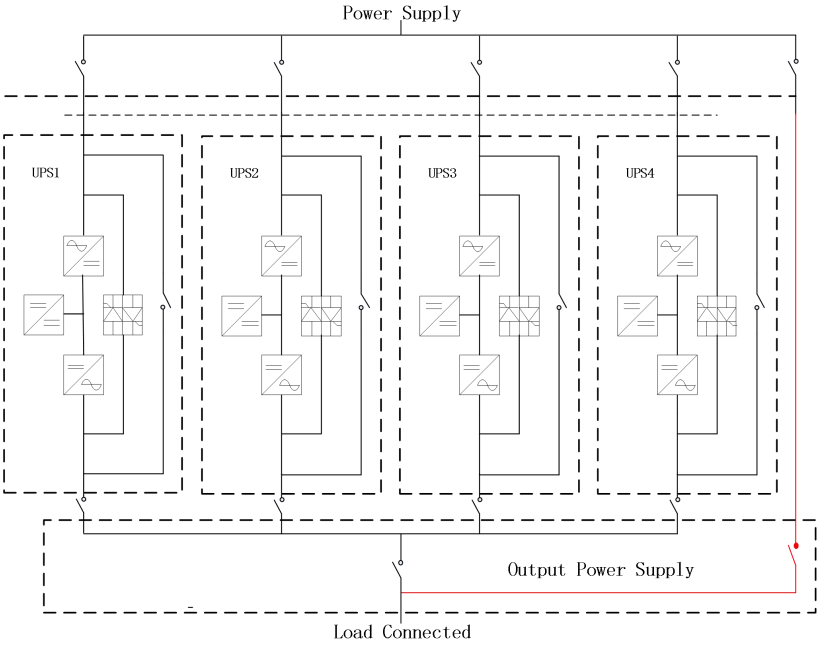

Fig. 5-5 Parallel diagram

The parallel board is located at the back of the UPS cabinet.

All the parallel cables are designed to be shielded and double insulated, and are connected between the UPS to form a loop as shown below in Fig.5-6.

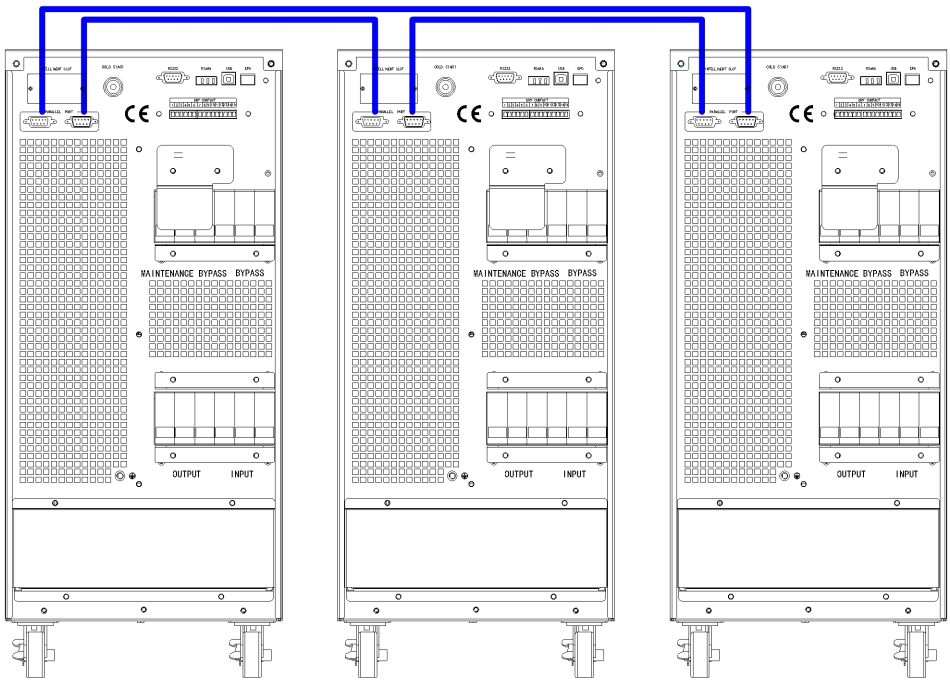

Fig.5-6 Parallel connection

5.5.2 Parallel system setting

Parallel system connection

For field installation, please connect the cables with the same length wire.

In order to assure that all units are equally utilized and to comply with relevant wiring rules, the following requirements apply:

1>All units shall be of the same rating and must be connected to the same bypass source.

2>The bypass and the main input sources must be referenced to the same neutral potential.

3>Any RCD (Residual Current detecting device), if installed, must be of an appropriate setting and located upstream of the common neutral bonding point. Alternatively, the device must monitor the protective earth currents of the system. Refer to the High Leakage Current Warning in the first part of this manual.

4>The outputs of all UPS must be connected to a common output bus.

Parallel system software setting

To change the parallel system setting, please follow the steps below.

With the monitoring software from manufacturer, select the page of “Settings” as below.

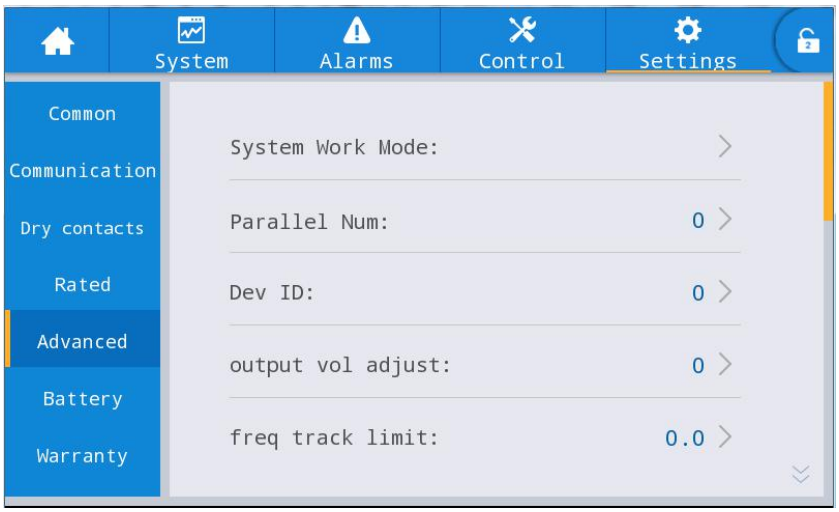

Fig.5-7 parallel setting interface

Set “System Work Mode” to “Parallel mode”, and set the “Parallel Num” to the number of units in parallel. For the setting of device ID with a system of 3 units in parallel, for example, set the number from 0 to 2 for these 3 units accordingly.

Restart the UPS when finish the setting. Here the setting is done. Ensure all the output parameters must be set the same.

When all the connection and settings are finished, follow the steps below for the operation of parallel system setup.

1>Close the output and input breaker of the first unit. Wait for the start up of bypass static switch and rectifier, about 90 seconds later; the system will transfer to normal mode. Check if there is any alarm on LCD and verify the output voltage is correct or not.

2>Turn on the second unit as the same operation with the first one; the unit will join the parallel system automatically.

3>Turn on the rest units one by one, and check the information on LCD.

4>Verify the load sharing with a certain load applied.

6 Maintenance

This chapter introduces UPS maintenance, including the maintenance instructions of power module and monitoring bypass module and the replacement method of dust filter.

6.1 Precautions

- Only certified engineers are authorized to maintain the UPS.
- The components or PCBs should be disassembled from top to bottom, so as to prevent any inclination from high gravity centre of the cabinet.
- To ensure the safety before maintaining, measure the voltage between operating parts and the earth with multimeter to ensure the voltage is lower than hazardous voltage, i.e. DC voltage is lower than 60Vdc, and AC maximum voltage is lower than 42.4Vac.
- Wait 10 minutes before opening the cover of the power module or the bypass after pulling out from the Cabinet.

6.2 Instruction for Maintaining UPS

For the maintenance of the UPS, please refer to chapter 5.2.4 for the instruction to transfer to maintenance bypass mode. After maintenance, re-transfer to normal mode according to chapter 5.2.5.

6.3 Instruction for Maintaining Battery string

For the Lead-Acid maintenance free battery, when maintenance the battery according to requirements, battery life can be prolonged. The battery life is mainly determined by the following factors:

1>Installation. The battery should be placed in dry and cool place with good ventilation. Avoid direct sunlight and keep away from heat source. When installing, ensure the correct connection to the batteries with same specification.

2>Temperature. The most suitable storage temperature is 20 ºC to 25ºC. The battery life will be shortened if the battery is used under high temperature or in deep discharging status. Refer to product manual for details.

3>Charging/discharging current. The best charging current for the lead-acid battery is 0.1C .The maximum current for the battery can be 0.3C.The suggested discharging current is 0.05C-3C.

4>Charging voltage. In most of the time, the battery is in standby state. When the utility is normal, the system will charge the battery in boost mode (Constant voltage with maximum limited) to full and then transfers to the state of float charge.

5>Discharge depth. Avoid deep discharging; which will greatly reduces the life time of the battery. When the UPS runs in battery mode with light load or no load for a long time, it will cause the battery to deep discharge.

6>Check periodically. Observe if any abnormality of the battery , measure if the voltage of each battery are in balance. Discharge the battery periodically.

	WARMING
	Daily inspection is very important! Check and confirm the battery connection is tightened regularly, and make sure there is no abnormal heat generated from the battery. If a battery has leakage or is damaged, it must be replaced, stored in a container resistant to sulfuric acid and disposed of in accordance with local regulations.

The waste lead-acid battery is a kind of hazardous waste and is one of the major contaminants controlled by government.

Therefore, its storage, transportation, use and disposal must comply with the national or local regulations and laws about the disposal of hazardous waste and waste batteries or other standards.

According to the national laws, the waste lead-acid battery should be recycled and reused, and it is prohibited to dispose of the batteries in other ways except recycling. Throwing away the waste lead-acid batteries at will or other improper disposal methods will cause severe environment pollution, and the person who does this will bear the corresponding legal responsibilities.

7 Product Specification

This chapter provides the specifications of the product, including environmental characteristics mechanical characteristics and electrical characteristics.

7.1 Applicable Standards

The UPS has been designed to conform to the following European and international standards:

Table 7.1 Compliance with European and International Standards

Item	Normative reference
General safety requirements for UPS used in operator access areas	EN50091-1-1/IEC62040-1-1/AS 62040-1-1
Electromagnetic compatibility (EMC) requirements for UPS	EN50091-2/IEC62040-2/AS 62040-2（C3）
Method of specifying the performance and test requirements of UPS	EN50091-3/IEC62040-3/AS 62040-3（VFI SS 111）

Note

The above mentioned product standards incorporate relevant compliance clauses with generic IEC and EN standards for safety (IEC/EN/AS60950), electromagnetic emission and immunity (IEC/EN/ AS61000 series) and construction (IEC/EN/AS60146 series and 60950).

	WARMING
	This product conforms the EMC requirements for UPS in Category C3 and it is not suitable for medical equipment.

7.2 Environmental Characteristics

Table 7.2 Environmental Characteristics

Item	Unit	10-30kVA	40-60kVA
Acoustic noise level at 1 meter	dB	<60dB	<65dB
Altitude of Operation	m	≤1000,load derated 1% per 100m from 1000m and 2000m	
Relative Humidity	%	0-95,non condensing	
Operating Temperature	℃	0-40,Battery life is halved for every 10°C increase above 20°C	
UPS Storage Temperature	℃	-40-70	

7.3 Mechanical Characteristic

Table 7.3 Mechanical Characteristics for Cabinet

Model	Unit	10kVA	15kVA	20kVA	30kVA	40kVA	60kVA
Dimension (W×H×D)	mm	250*720*560	250*720*560 250*800*700	250*720*560 250*800*700	250*840*650 250*840*930	250*720*560 250*780*1185	250*790*560
Weight	kg	31/82	33/131	33/145	42/215	42/300	48
Color	N/A	Black					
Protection Level IEC（60529）	N/A	IP20					

7.4 Electrical Characteristics

Model	10kVA	15kVA	20kVA	30kVA	40kVA	60kVA
Power Rating	10kVA/10kW	15kVA/15kW	20kVA/20kW	30kVA/30kW	40kVA/40kW	60kVA/60kW
Input Rectifier AC input Mains						
Phase	3 Phases + Neutral + Ground					
Rated Input Voltage	380/400/415 (three-phase and sharing neutral with the bypass input)					
Rated Frequency	50/60Hz					
Input Voltage Range	304~478Vac (Line-Line),full load 228V~304Vac (Line-Line),load decrease linearly according to the min phase voltage					
Input Frequency Range	40Hz～70Hz					
Input Power Factor	>0.99					
Input Current THDi	<5%(full non-linear load)					
Bypass Mains Input						
Rated Bypass Voltage	380/400/415Vac (Line-Line)					
Rated Frequency	50/60Hz					
Bypass Voltage Range	Selectable, default -20%～+15% Up limited: +10%, +15%, +20%, +25% Down limited: -10%, -15%, -20%, -30%, -40%					
Bypass Frequency Range	Selectable, ±1Hz, ±3Hz, ±5Hz					
Bypass Overload	125% long term operation 125%~130% 10min 130%~150% 1min 150%~400% 1s >400% , < 200ms					
Current rating of neutral cable	1.7×In					
Switch time (between bypass and inverter)	Synchronized transfer: 0ms					
Inverter Output						
Rated Inverter Voltage	380/400/415Vac (Line-Line)					
Rated Frequency	50/60Hz					
Output Power Factor	1					
Voltage precision	±1%(Linear Load)					
Frequency precision	0.1Hz					
Synchronized Range	Settable, ±0.5Hz ~ ±5Hz, default ±3Hz					
Synchronized Slew Rate	Settable, 0.5Hz/S ~ 3Hz/S, default 0.5Hz/S					
Transient Response	<5% for step load (20% - 80% -20%)					
Transient recovery	< 20ms for step load (20% - 100% -20%)					
Output Voltage THDu	<1% (full linear Load) <3% (full non-linear load according to IEC/EN62040-3)					
Inverter Overload	<110%, 60min; 110%~125%,10min; 125%~150%,1min; >150%,200ms					
Battery						
Long run model battery voltage	Rated：±240V default, ±120V～±240V					

Float charge voltage	2.25V/cell(selectable from 2.2V/cell～2.35V/cell) Constant current and floated voltage charge mode		
Equalized charge voltage	2.37V/cell(selectable from : 2.30V/cell~2.45V/cell) Floated current and constant voltage charge mode		
Temperature compensation	3.0(selectable:0~5.0) mV/℃/cl		
Charger Voltage precision	≤1%		
Ripple current	≤5%		
Final discharging voltage EOD Voltage （Acid battery）	1.65V/cell(selectable from: 1.60V/cell~1.750V/cell) @0.6C discharge current 1.75V/cell (selectable from: 1.65V/cell~1.8V/cell) @0.15C discharge current (EOD voltage changes linearly within the set range according to discharge current)		
Battery Charging Power Max Current	10A	15A	20A
System			
Display	LCD+LED(5 inch touch screen)		
Normal mode Efficiency (dual conversion)	>95%	96%	
ECO mode Efficiency	98%	98.5%	
Battery discharging efficiency (battery at nominal voltage 480Vdc and full-rated linear load)	>94.5%		
Interface	Standard:RS232, RS485, USB,Programmable dry contact Option: SNMP, Parallel kit		

8 Software Download & Installation

（Only for the model with communication port）

Please follow steps below to download and install monitoring software :

1>Go to the website https://www.idbkmonitor.com.

2>Click UPSSmartView software icon and then choose your required OS to download the software.

3>Follow the on-screen instructions to install the software.